Requested Action:	Major Site Plan Approval
Project Name:	SPMAJ 2016-08; Cowan Crossings Cohen Office Building
Property Address:	1551 Jefferson Davis Highway
GPIN#:	7779-44-7040
Applicant Name:	Jason Cohen, Kingston Properties, LLC
Description:	Construction of a 15,000 square foot, 2 story-office building and related infrastructure. (Former site of the proposed Burger King.)
Comments Due:	The general public is invited to make inquiries and provide comments regarding this request on or before close of business on December 5, 2016, to mesherman@fredericksburgva.gov.

COHEN OFFICE BUILDING

COWAN CROSSING

CITY OF FREDERICKSBURG
VIRGINIA

GPIN: 7779-44-7040 **ZONING: C-T** **ADDRESS: 1551 JEFF. DAVIS HWY**

SITE INFORMATION

GPIN:	7779-44-7040
ZONING:	CT
PRESENT USE:	UNDEVELOPED
PROPOSED USE:	OFFICE BUILDING
OVERLAY DISTRICT:	COWAN BOULEVARD CORRIDOR
BUILDING AREA:	15,000 SQ.FT.
PARKING REQUIRED:	1 SPACE/300 SQ.FT. 50 SPACES REQUIRED
PARKING PROVIDED:	50 SPACES
HADICAP SPACES REQUIRED:	2 ADA SPACES (1 VAN ACCESSIBLE)
HADICAP SPACES PROVIDED:	2 SPACES (2 VAN ACCESSIBLE)
LOADING REQUIRED:	1 SPACE
LOADING PROVIDED:	1 SPACE
TRASH COLLECTION:	PRIVATE
WATER:	PUBLIC CONNECTION
SEWER:	PUBLIC CONNECTION
ROADS:	PRIVATE
PROPERTY AREA:	1.01 ACRES
OPEN SPACE REQUIRED:	20%
OPEN SPACE PROVIDED:	25.7%
IMPERVIOUS SURFACE RATIO:	74.3%
ALLOWABLE FLOOR AREA RATIO:	0.50
PROPOSED FLOOR AREA RATIO:	0.34
ALLOWABLE BUILDING HEIGHT:	40'
PROPOSED BUILDING HEIGHT:	32'
MINIMUM YARD REQUIREMENTS:	FRONT: 20' SIDE: 10' REAR: 15'
ESTIMATED VEHICLE TRIPS:	165 VPD
HYDRAULIC UNIT CODE	HUC RA46

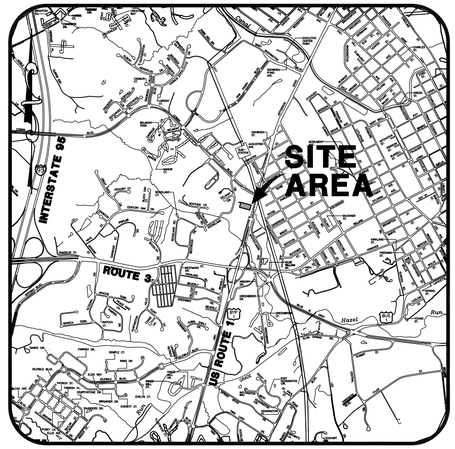

VICINITY MAP SCALE: 1"= 2,000'

INDEX TO DRAWINGS

1.) COVER SHEET
2.) EXISTING CONDITIONS
3.) LAYOUT PLAN
4.) SIDEWALK PLAN
5.) GRADING PLAN
6.) UTILITY & EASEMENT PLAN
7.) DRAINAGE AREA & STORMWATER MANAGEMENT PLAN
8.) DRAINAGE PROFILES & CALCULATIONS
9.) EROSION & SEDIMENT CONTROL PLAN –PHASE I
10.) EROSION & SEDIMENT CONTROL PLAN –PHASE II
11.) EROSION & SEDIMENT CONTROL –NARRATIVE
12.) EROSION & SEDIMENT CONTROL –DETAILS
13.) UTILITY DETAILS
14.) LANDSCAPING PLAN
15.) LIGHTING PLAN & DETAILS

SOURCE OF TITLE:

INSTRUMENT #160002574, DATED SEPTEMBER 29, 2016

SITE PLAN CERTIFICATE:

I HEREBY CERTIFY THAT TO THE BEST OF MY KNOWLEDGE AND BELIEF THIS PLAN IS CORRECT AND COMPLIES WITH THE REQUIREMENTS OF THE CITY OF FREDERICKSBURG, VA, AND THAT I AM A QUALIFIED PROFESSIONAL LICENSED IN VIRGINIA.

VA LICENSE #: 036528

SIGNATURE 10/12/2016 DATE

RESPONSIBLE LAND DISTURBER CERTIFICATE:

RLD# 36528

Daniel C. Webb 540.371.1209
NAME TELEPHONE #

SIGNATURE 10/12/2016 DATE

NOTE: THE R.L.D. MENTIONED ABOVE IS FOR THE PURPOSES OF PLAN APPROVAL ONLY. PRIOR TO THE START OF CONSTRUCTION, THE CONTRACTOR SHALL DESIGNATE A PERSON CERTIFIED BY THE VIRGINIA DCR AS THE R.L.D. FOR THIS PROJECT. THE CONTRACTOR SHALL NOTIFY THE OWNER IN WRITING, WITH THE ENGINEER COPIED, OF THE NAME AND R.L.D. NUMBER OF THE DESIGNEE.

OWNER/DEVELOPER:

KINGSTON PROPERTIES, LLC
JASON COHEN
600 LAFAYETTE BLVD.
FREDERICKSBURG, VA 22401

PROJECT NARRATIVE:

THIS PROJECT INCLUDES THE CONSTRUCTION OF A TWO STORY OFFICE BUILDING, ASSOCIATED PARKING, STORM SEWER AND UTILITIES. THE PROJECT IS LOCATED NEAR THE INTERSECTION OF JEFFERSON DAVIS HIGHWAY AND COWAN BOULEVARD. VEHICULAR ACCESS WILL BE PROVIDED FROM JEFFERSON DAVIS HIGHWAY AND COWAN BOULEVARD. PEDESTRIAN ACCESS WILL BE PROVIDED FROM THE ADJACENT SITES INCLUDING FIRST CITIZENS BANK AND CVS PHARMACY.

WEBB AND ASSOCIATES

A SURVEYING AND DESIGN COMPANY

11903 BOWMAN DRIVE, SUITE 106, FREDERICKSBURG, VA. 22408
(540)371-1209 (804)633-9907 FAX (540)371-4650

APPROVALS

DEVELOPMENT ADMINISTRATOR

ZONING ADMINISTRATOR

STORMWATER ADMINISTRATOR

APPROVED FOR FIRE LANES AND SIGNAGE, HYDRANT LOCATIONS AND COLOR CODING, FDC AND PIV LOCATIONS, TURNING RADII AND ROADWAY WIDTH FOR EMERGENCY VEHICLES.

FIRE MARSHAL

APPROVED FOR WORK RELATED TO PUBLIC WATER, SEWER, STORM DRAINAGE, STREET TREES AND RIGHTS OF WAYS.

DEPARTMENT OF PUBLIC WORKS

REVISION BLOCK

DATE	DESCRIPTION	BY

COMMONWEALTH OF VIRGINIA
DANIEL C. WEBB
LICENSE NO.
036528
10-12-16
PROFESSIONAL ENGINEER

W W WEBB & ASSOCIATES, PLLC
ENGINEERING · SURVEYING · LAND PLANNING
11903 BOWMAN DRIVE, SUITE 106, FREDERICKSBURG, VA. 22408
OFFICE (540)371-1209 FAX (540)371-4650

COVER SHEET

COHEN OFFICE BUILDING
COWAN CROSSING
CITY OF FREDERICKSBURG
VIRGINIA

DATE:	OCTOBER 12, 2016
SCALE:	NA
DESIGNED BY:	DWR
DRAWN BY:	MRE
CHECKED BY:	DCW
ACAD FILE:	16D025–ASP
DRAWING NO:	16D025

SHEET NO. 1 OF 15 SHEETS

CURVE	RADIUS	ARC LENGTH	CHORD LENGTH	CHORD BEARING	DELTA ANGLE	TANGENT
C5	14.00'	3.43'	3.42'	N82°34'42"E	14°02'12"	1.72'

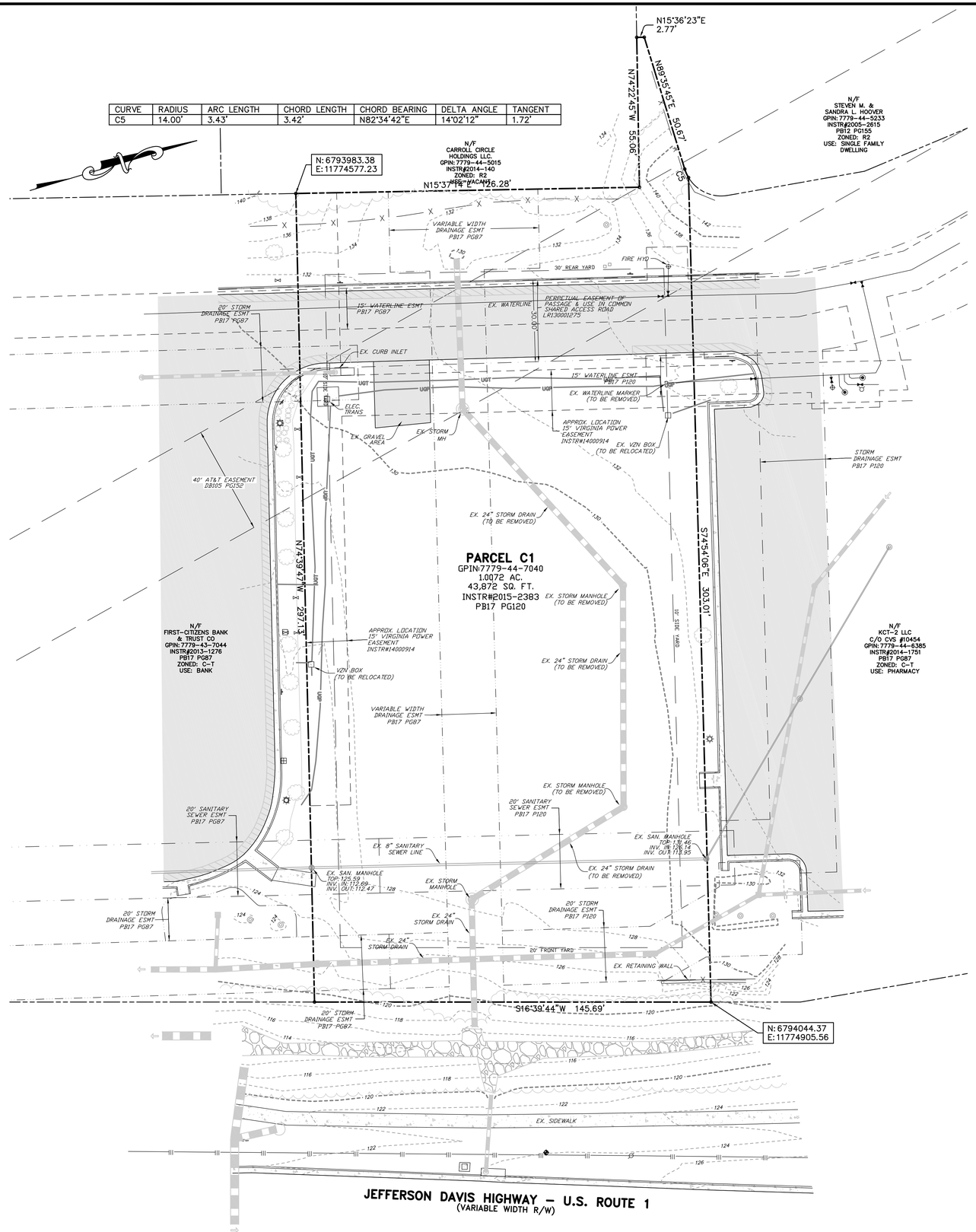

LEGEND:

- DENOTES BOUNDARY LINES
- DENOTES EASEMENT
- DENOTES CENTERLINE OF CREEK
- DENOTES FENCE
- DENOTES ADJACENT PROPERTY LINE
- DENOTES STORM CULVERT PIPES
- DENOTES UNDERGROUND TELEPHONE LINE
- DENOTES UNDERGROUND POWER LINE
- DENOTES CONCRETE AREA
- DENOTES ASPHALT AREA
- DENOTES EXISTING BUILDING

NOTES:

1. NO TITLE REPORT FURNISHED
2. EASEMENTS NOT SHOWN MAY EXIST
3. UNDERGROUND UTILITIES AND SUB-SURFACE FACILITIES NOT LOCATED
4. THIS SURVEY DOES NOT ADDRESS WETLANDS, TOXIC OR CONTAMINATED WASTE OR SOIL CONDITIONS NOR HAVE ANY REPORTS, STUDIES, ETC... BEEN FURNISHED TO THIS SURVEYOR OTHER THAN THOSE NOTED.
5. THIS PROPERTY IS NOT WITHIN A SPECIAL FLOOD HAZARD AREA, AS PER FLOOD INSURANCE RATE MAP, COMMUNITY-PANEL NO. 510065 0036 C; DATED: SEPT. 19, 2007.
6. NO HISTORIC BUILDINGS OR FEATURES KNOWN.
7. NO PLACES OF BURIAL KNOWN.

CHESAPEAKE BAY NOTE

CHESAPEAKE BAY PRESERVATION ACT. THE PARCEL DESCRIBED WITHIN THIS PLAN DOES LIE WITHIN THE RESOURCE MANAGEMENT AREA (RMA) AND DOES NOT CONTAIN RESOURCE PROTECTION AREAS (RPA) WITHIN THE CHESAPEAKE BAY PRESERVATION OVERLAY DISTRICT.

PASS NOTE

DUE TO RECENT FINDINGS OF POSSIBLE ACID SULPHATE SOILS (PASS) WITHIN THE PROXIMITY OF THE CITY OF FREDERICKSBURG, THE DEVELOPERS, BUILDER AND ENGINEER ACKNOWLEDGE THAT IF ACID SULPHATE SOILS OR OTHER SOILS THAT PRODUCE A pH OF <4 ARE PRESENT ON THE PROJECT SITE, EXTENSIVE TREATMENT TO BRING THE SOILS ACID/pH LEVEL TO AN ACCEPTABLE LEVEL TO SUSTAIN PLANT GROWTH MAY BE REQUIRED.

GPS TIE IN NOTE

THE SITE PLAN SHOWN HEREON IS REFERENCED TO THE VIRGINIA COORDINATE SYSTEM OF 1983 AS COMPUTED FROM A FIELD SURVEY WHICH TIES THIS DEVELOPMENT BOUNDARY TO LOY 8.

THE GRID FACTOR THAT HAS BEEN APPLIED TO THE FIELD DISTANCE TO DERIVE THE REFERENCED COORDINATES IS 0.99995997. UNLESS OTHERWISE STATED, THE PLAT DISTANCES SHOWN ARE INTENDED TO BE HORIZONTAL DISTANCES MEASURED AT THE MEAN ELEVATION OF THE DEVELOPMENT.

THE BEARINGS SHOWN ARE REFERENCED TO VIRGINIA STATE PLANE 1983 GRID NORTH.

0' 20' 40' 60'

REVISION BLOCK			
DATE	DESCRIPTION	BY	

COMMONWEALTH OF VIRGINIA
DANIEL C. WEBB
LICENSE NO. 036528
10-12-16
PROFESSIONAL ENGINEER

W W WEBB & ASSOCIATES, PLLC
ENGINEERING · SURVEYING · LAND PLANNING
11903 BOWMAN DRIVE, SUITE 106, FREDERICKSBURG, VA. 22408
OFFICE (540)371-1209 FAX (540)371-4650

EXISTING CONDITIONS

COHEN OFFICE BUILDING
COWAN CROSSING
CITY OF FREDERICKSBURG
VIRGINIA

DATE:	OCTOBER 12, 2016
SCALE:	1" = 20'
DESIGNED BY:	DWR
DRAWN BY:	MRE
CHECKED BY:	DCW
ACAD FILE:	16D025-BSP
DRAWING NO:	16D025

SHEET NO. 2 OF 15 SHEETS

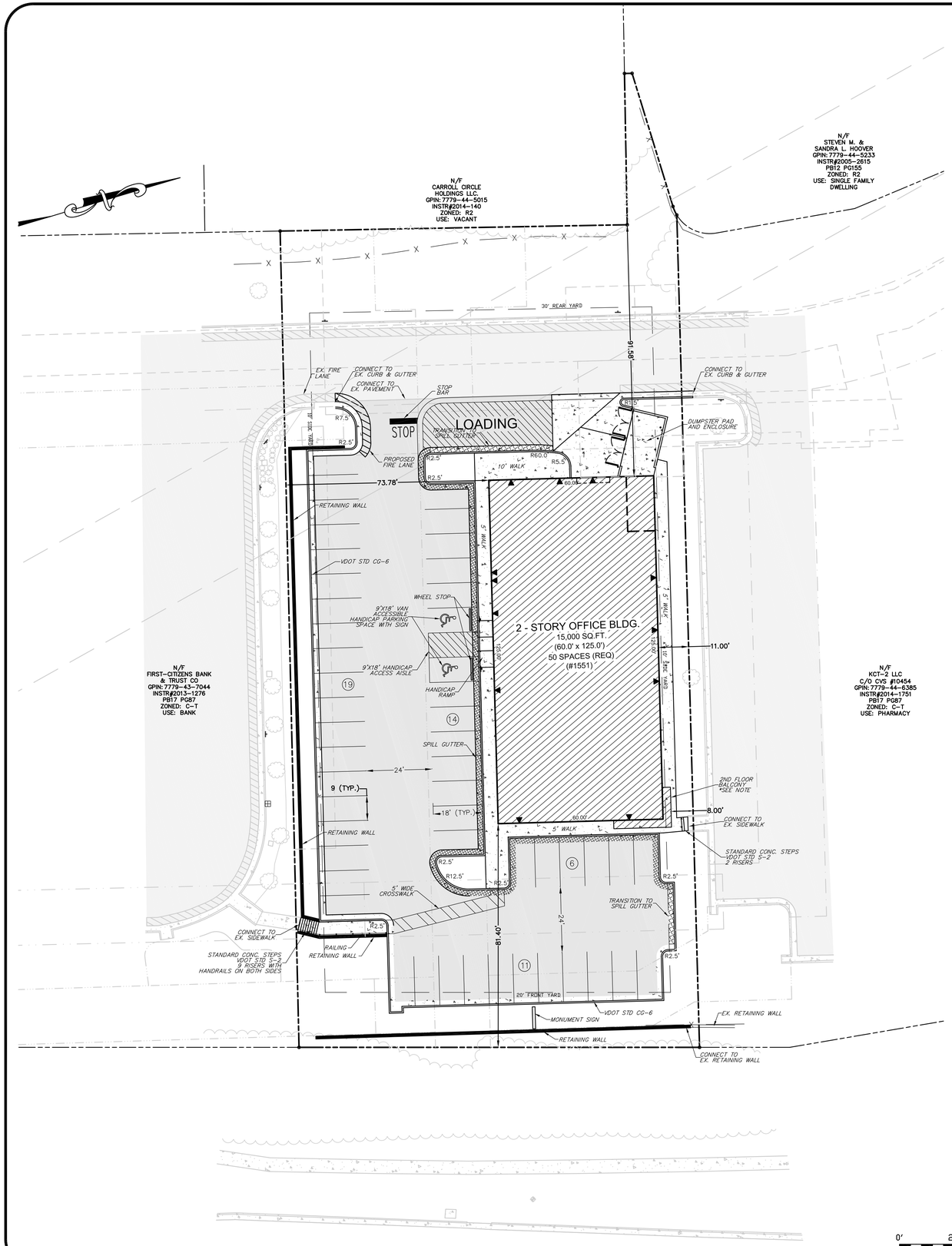

COWAN CROSSING

TYPE	REQUIREMENTS	CALCULATIONS	REQUIRED	PROVIDED
STANDARD	1 SP/300 SF ENCLOSED OFFICE BUILDING	(15,000 SF/300) * 1 SP=	50	50
	2-HANDICAPPED	TOTAL:	50	50
	1-LOADING SPACE			

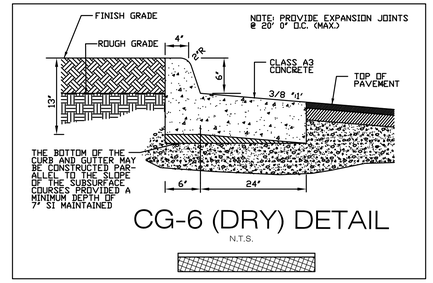

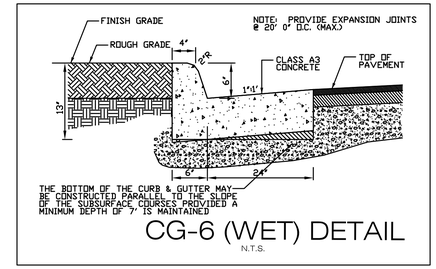

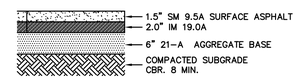

TYPICAL PAVEMENT SECTION
N.T.S.

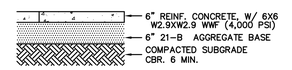

6" TYPICAL CONCRETE SECTION
N.T.S. DUMPSTER PAD

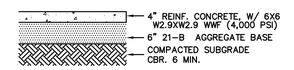

4" TYPICAL CONCRETE SECTION
N.T.S. SIDEWALKS

DENOTES FIRE LANES

SIGN TYPE "A"

Standard wording with an arrow at bottom pointing to the right. One sign mounted parallel to the line of curbing or pavement edge at end of painted area.

SIGN TYPE "C"

Standard wording with an arrow at bottom pointing to the left. One sign mounted parallel to the line of curbing or pavement edge at end of painted area.

SIGN TYPE "D"

Standard wording with no arrow. Two signs, back to back, mounted perpendicular to line of curbing or pavement edge.

Signage Specifications

(1) Metal construction, 12" x 18"
(2) Red letters on reflective white background with 3/8" red trim strip around entire outer edge of sign.
(3) Lettering on sign to be: "NO PARKING OR STANDING FIRE LANE"
(4) lettering size to be as follows:
a. NO PARKING and STANDING –2"
b. OR –1.5"
c. FIRE LANE –2.5"
d. arrows 1"x6" solid shaft with solid head 1.5" wide and 2" deep.
(5) Signs are to be mounted 6' from ground surface to the bottom of the sign unless otherwise directed by the Fire official.
(6) Posts for signs, when required, shall be metal and securely mounted, unless written permission for alternatives is obtained from the Fire Official prior to installation. Signs should be spaced as required in section 2-5.2.C. above and as shown on the approved site plan.
(7) Other special signs may be allowed if approved in advanced by the Fire Official.

NO PARKING FIRE LANE SIGNS

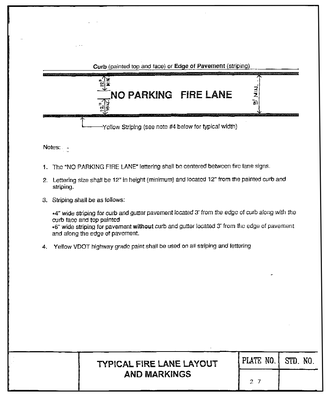

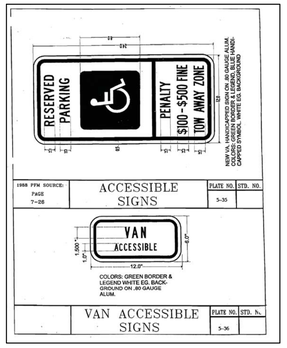

* PER 72-82.4-C-2 (G) OF THE CITY OF FREDERICKSBURG UNIFIED DEVELOPMENT ORDINANCE- BALCONIES MAY PROJECT INTO BUILDING SETBACK

REVISION BLOCK

DATE	DESCRIPTION	BY

COMMONWEALTH OF VIRGINIA
DANIEL C. WEBB
LICENSE NO. 036528
10-12-16
PROFESSIONAL ENGINEER

W W WEBB & ASSOCIATES, PLLC
ENGINEERING · SURVEYING · LAND PLANNING
11903 BOWMAN DRIVE, SUITE 106, FREDERICKSBURG, VA. 22408
OFFICE (540)371-1209 FAX (540)371-4650

LAYOUT PLAN

COHEN OFFICE BUILDING
COWAN CROSSING
CITY OF FREDERICKSBURG
VIRGINIA

DATE:	OCTOBER 12, 2016
SCALE:	1" = 20'
DESIGNED BY:	DWR
DRAWN BY:	MRE
CHECKED BY:	DCW
ACAD FILE:	16D025-CSP
DRAWING NO:	16D025

SHEET NO. 3 OF 15 SHEETS

ADJACENT LOT INFORMATION HAS BEEN TAKEN FROM APPROVED PLANS PREPARED BY FAIRBANKS & FRANKLIN TITLED "BURGER KING COWAN CROSSING" (DOCUMENT NO. 263-1000, SHEET 4A OF 20)

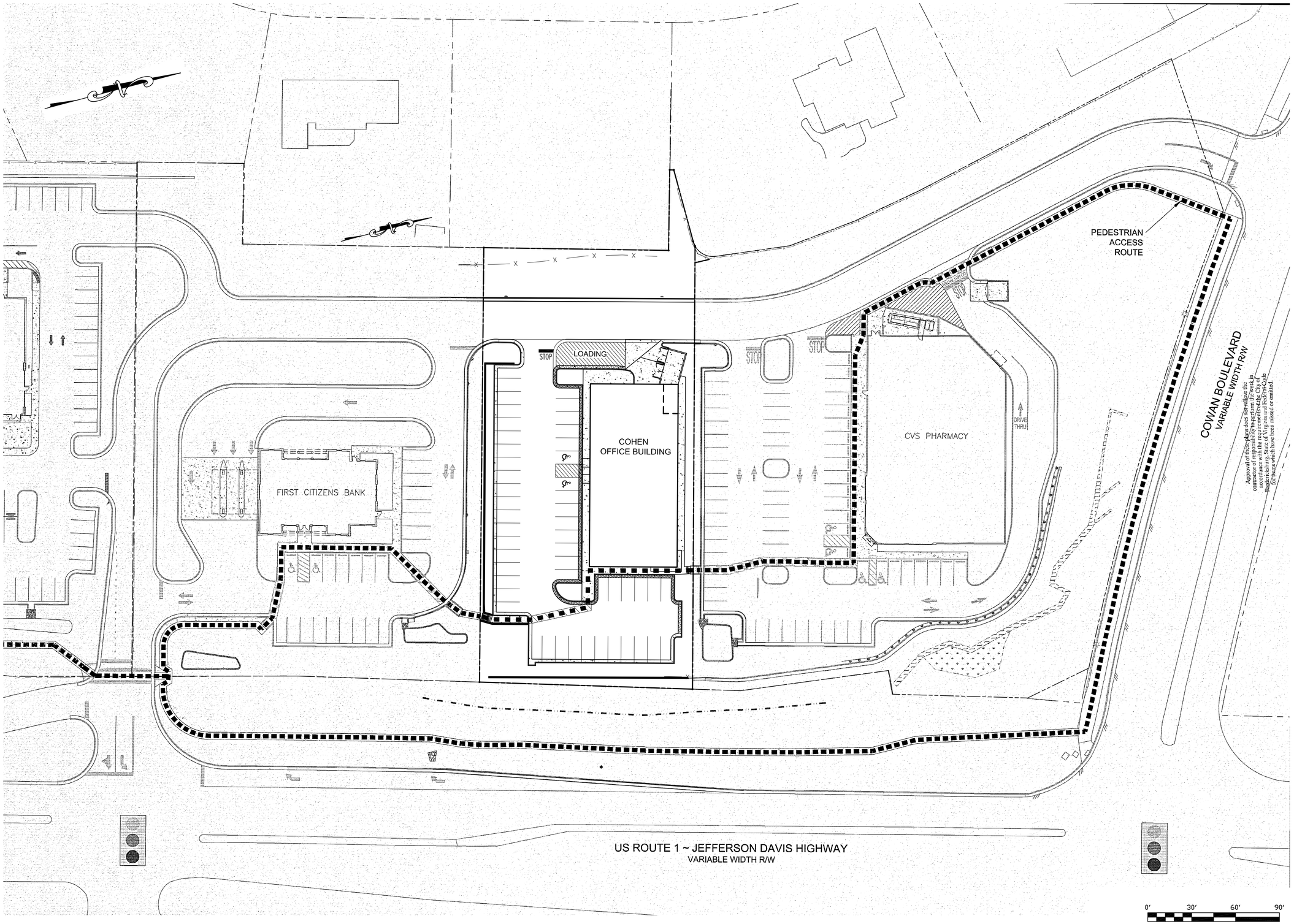

Approval of these plans does not relieve the contractor of responsibility to perform the work in accordance with the requirements of the City of Fredericksburg, Code of Virginia and Federal Laws. Errors and omissions, if any, have been missed or omitted.

REVISION BLOCK

DATE	DESCRIPTION	BY

COMMONWEALTH OF VIRGINIA
DANIEL C. WEBB
LICENSE NO. 036528
10-12-16
PROFESSIONAL ENGINEER

W W WEBB & ASSOCIATES, PLLC
ENGINEERING · SURVEYING · LAND PLANNING
11903 BOWMAN DRIVE, SUITE 106, FREDERICKSBURG, VA. 22408
OFFICE (540)371-1209 FAX (540)371-4650

SIDEWALK PLAN

COHEN OFFICE BUILDING
COWAN CROSSING

CITY OF FREDERICKSBURG
VIRGINIA

DATE:	OCTOBER 12, 2016
SCALE:	1"=30'
DESIGNED BY:	DWR
DRAWN BY:	MRE
CHECKED BY:	DCW
ACAD FILE:	16D025-DSP
DRAWING NO:	16D025

SHEET NO. 4 OF 15 SHEETS

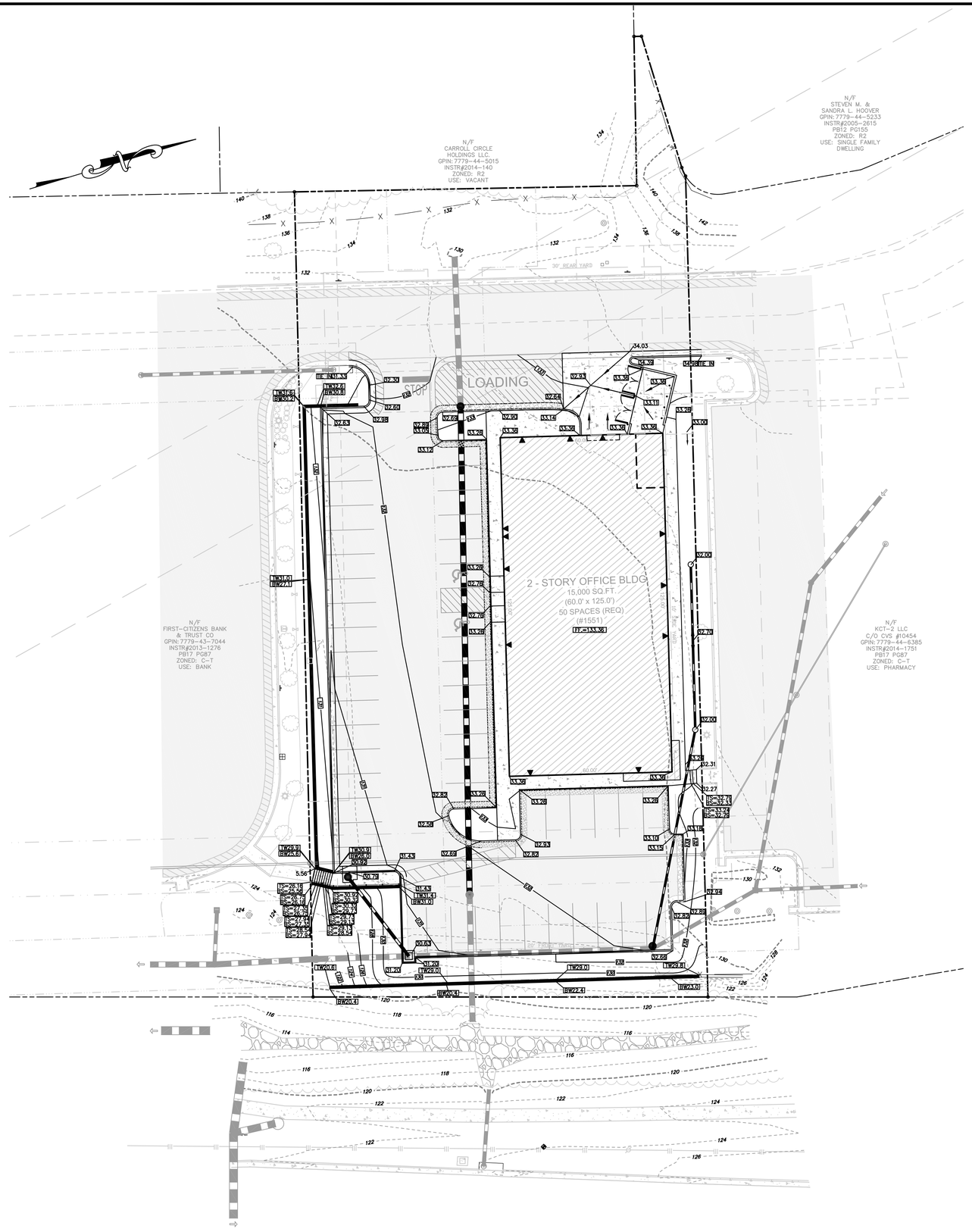

LEGEND:

- DENOTES BOUNDARY LINES
- DENOTES EASEMENT
- DENOTES FENCE
- DENOTES ADJACENT PROPERTY LINE
- DENOTES STORM CULVERT PIPES
- DENOTES CONCRETE AREA
- DENOTES ASPHALT AREA
- DENOTES EXISTING BUILDING
- 0.00 – DENOTES TOP OF CURB ELEV.

0' 20' 40' 60'

REVISION BLOCK			
DATE	DESCRIPTION	BY	

COMMONWEALTH OF VIRGINIA
DANIEL C. WEBB
LICENSE NO.
036528
10-12-16
PROFESSIONAL ENGINEER

W W WEBB
& ASSOCIATES, PLLC
ENGINEERING · SURVEYING · LAND PLANNING
11903 BOWMAN DRIVE, SUITE 106, FREDERICKSBURG, VA. 22408
OFFICE (540)371-1209 FAX (540)371-4650

GRADING PLAN

COHEN OFFICE BUILDING
COWAN CROSSING

CITY OF FREDERICKSBURG
VIRGINIA

DATE:	OCTOBER 12, 2016
SCALE:	1" = 20'
DESIGNED BY:	DWR
DRAWN BY:	MRE
CHECKED BY:	DCW
ACAD FILE:	16D025-ESP
DRAWING NO:	16D025

SHEET NO. 5 OF 15 SHEETS

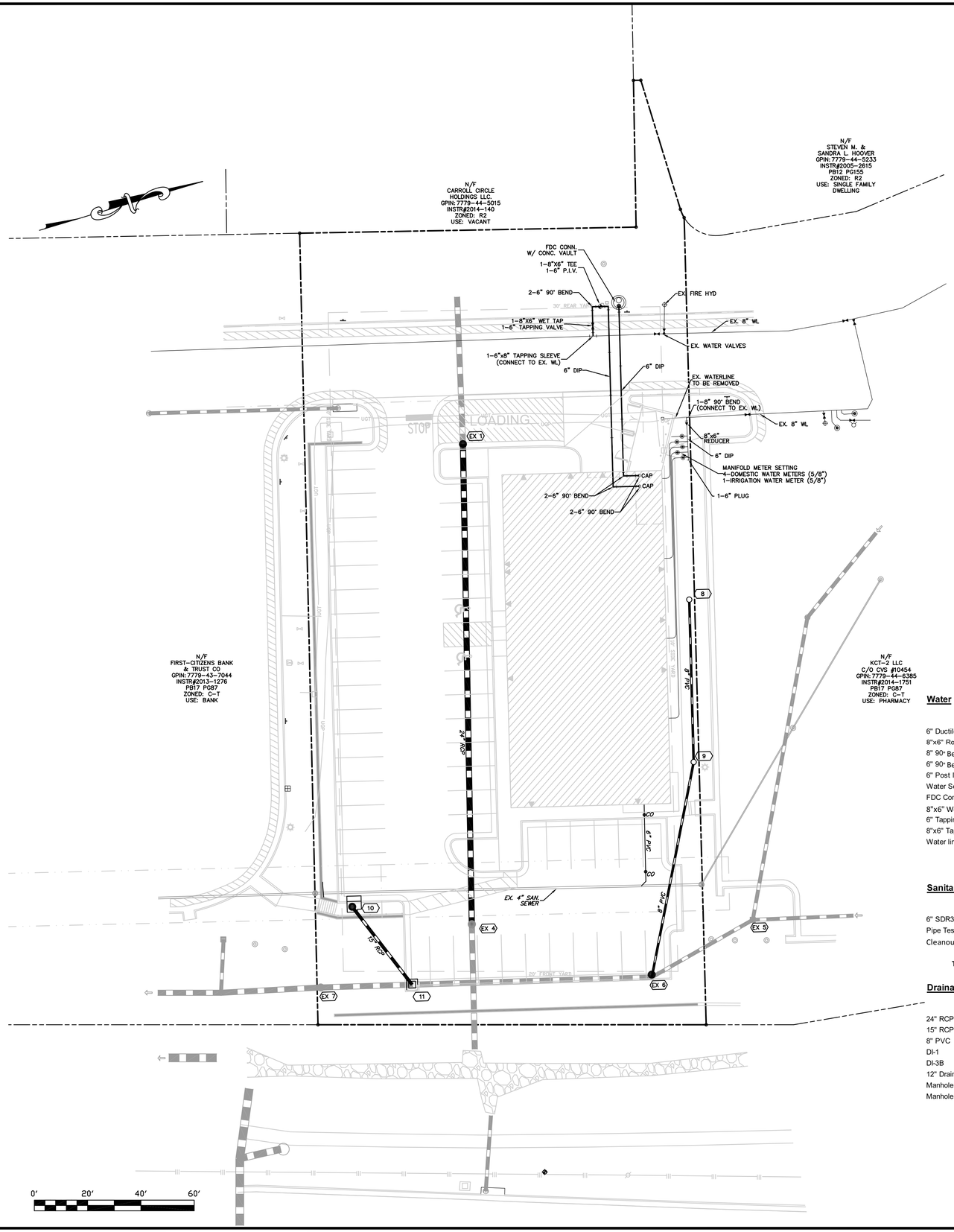

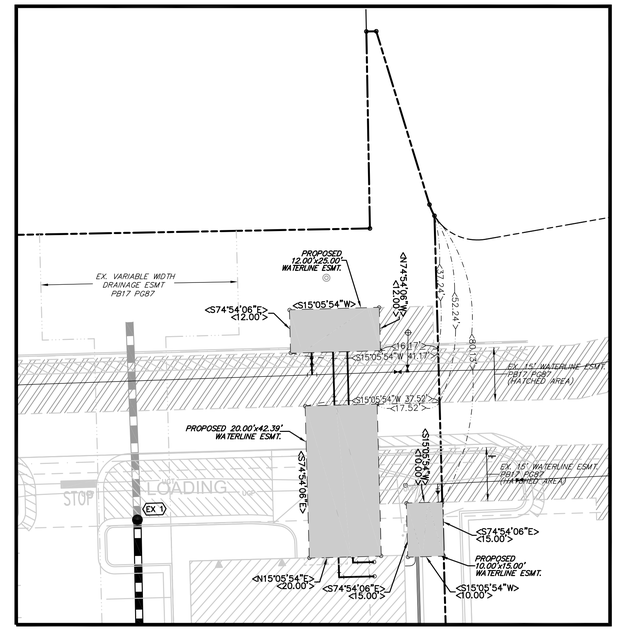

EASEMENT PLAN

W W WEBB & ASSOCIATES, PLLC

ENGINEERING-SURVEYING-LANDPLANNING

11903 Bowman Drive, Suite 106, FREDERICKSBURG, VA. 22408

540-371-1209 FAX 540-371-4650

DATE: 10/12/2016

PROJECT: COWAN'S CORNER- COHAN OFFICE BUILDING

PROJECT #:

PREPARED BY :

Water

Item	Quantity	Units	Unit Cost	Estimated Cost	% Work Complete	Work Completed	Work Remaining
6" Ductile Iron Pipe	188	Feet	$50.00	$ 9,400.00	0.0%	$ -	$ 9,400.00
8"x6" Reducer	1	Each	$330.00	$ 330.00	0.0%	$ -	$ 330.00
8" 90° Bend	1	Each	$325.00	$ 325.00	0.0%	$ -	$ 325.00
6" 90° Bend	6	Each	$300.00	$ 1,800.00	0.0%	$ -	$ 1,800.00
6" Post Indecator Valve	1	Each	$750.00	$ 750.00	0.0%	$ -	$ 750.00
Water Service	5	Each	$1,700.00	$ 8,500.00	0.0%	$ -	$ 8,500.00
FDC Connection	1	Each	$1,500.00	$ 1,500.00	0.0%	$ -	$ 1,500.00
8"x6" Wet Tap	1	Each	$2,500.00	$ 2,500.00	0.0%	$ -	$ 2,500.00
6" Tapping Valve	1	Each	$250.00	$ 250.00	0.0%	$ -	$ 250.00
8"x6" Tapping Sleeve	1	Each	$350.00	$ 350.00	0.0%	$ -	$ 350.00
Water line Testing	188	Feet	$2.30	$ 432.40	0.0%	$ -	$ 432.40
Total Water:				**$ 26,137.40**	**0.0%**	**$ -**	**$ 26,137.40**

Sanitary Sewer

Item	Quantity	Units	Unit Cost	Estimated Cost	% Work Complete	Work Completed	Work Remaining
6" SDR35	31	Feet	$30.00	$ 930.00	0.0%	$ -	$ 930.00
Pipe Testing	31	Feet	$3.00	$ 93.00	0.0%	$ -	$ 93.00
Cleanouts	2	Each	$250.00	$ 500.00	0.0%	$ -	$ 500.00
Total Sanitary Sewer:				**$ 1,523.00**	**0.0%**	**$ -**	**$ 1,523.00**

Drainage Improvements

Item	Quantity	Units	Unit Cost	Estimated Cost	% Work Complete	Work Completed	Work Remaining
24" RCP	181	Feet	$55.00	$ 9,955.00	0.0%	$ -	$ 9,955.00
15" RCP	39	Feet	$36.00	$ 1,404.00	0.0%	$ -	$ 1,404.00
8" PVC	144	Feet	$36.00	$ 5,184.00	0.0%	$ -	$ 5,184.00
DI-1	1	Each	$3,500.00	$ 3,500.00	0.0%	$ -	$ 3,500.00
DI-3B	1	Each	$3,500.00	$ 3,500.00	0.0%	$ -	$ 3,500.00
12" Drain Basin & Dome Grate	2	Each	$1,200.00	$ 2,400.00	0.0%	$ -	$ 2,400.00
Manhole	2	Each	$3,000.00	$ 6,000.00	0.0%	$ -	$ 6,000.00
Manhole Extension	1	Each	$1,500.00	$ 1,500.00	0.0%	$ -	$ 1,500.00
Total Water:				**$ 33,443.00**	**0.0%**	**$ -**	**$ 33,443.00**

Total: $ 61,103.40

Plus 25% $ 76,379.25

LEGEND:

- DENOTES BOUNDARY LINES
- DENOTES EASEMENT
- DENOTES FENCE
- DENOTES ADJACENT PROPERTY LINE
- DENOTES STORM CULVERT PIPES
- DENOTES CONCRETE AREA
- DENOTES ASPHALT AREA
- DENOTES BUILDING AREA

REVISION BLOCK

DATE	DESCRIPTION	BY

COMMONWEALTH OF VIRGINIA
DANIEL C. WEBB
LICENSE NO.
036528
10-12-16
PROFESSIONAL ENGINEER

W W WEBB & ASSOCIATES, PLLC
ENGINEERING - SURVEYING - LAND PLANNING
11903 BOWMAN DRIVE, SUITE 106, FREDERICKSBURG, VA. 22408
OFFICE (540)371-1209 FAX (540)371-4650

UTILITY & EASEMENT PLAN

COHEN OFFICE BUILDING
COWAN CROSSING
CITY OF FREDERICKSBURG
VIRGINIA

DATE: OCTOBER 12, 2016
SCALE: 1" = 20'
DESIGNED BY: DWR
DRAWN BY: MRE
CHECKED BY: DCW

ACAD FILE: 16D025-FSP
DRAWING NO: 16D025

SHEET NO. 6 OF 15 SHEETS

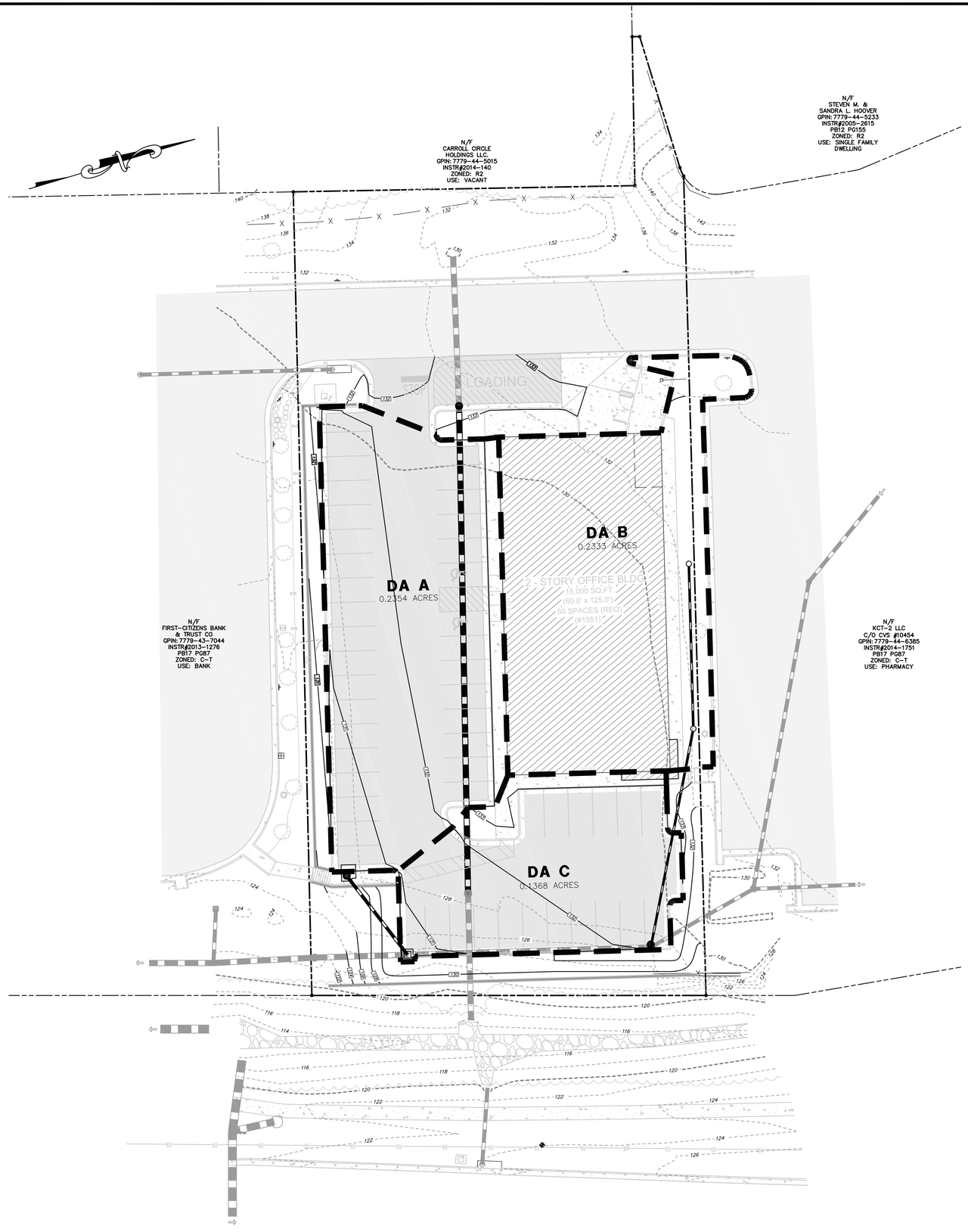

LEGEND:

- DENOTES BOUNDARY LINES
- DENOTES FENCE
- DENOTES ADJACENT PROPERTY LINE
- DENOTES STORM CULVERT PIPES
- DENOTES CONCRETE AREA
- DENOTES ASPHALT AREA
- DENOTES EXISTING BUILDING

0' 20' 40' 60'

REVISION BLOCK		
DATE	DESCRIPTION	BY

COMMONWEALTH OF VIRGINIA
DANIEL C. WEBB
LICENSE NO.
036528
10-12-16
PROFESSIONAL ENGINEER

W W WEBB
& ASSOCIATES, PLLC
ENGINEERING · SURVEYING · LAND PLANNING
11903 BOWMAN DRIVE, SUITE 106, FREDERICKSBURG, VA. 22408
OFFICE (540)371-1209 FAX (540)371-4650

DRAINAGE AREA PLAN

COHEN OFFICE BUILDING
COWAN CROSSING

CITY OF FREDERICKSBURG
VIRGINIA

DATE:	OCTOBER 12, 2016
SCALE:	1" = 20'
DESIGNED BY:	DWR
DRAWN BY:	MRE
CHECKED BY:	DCW
ACAD FILE:	16D025-GSP
DRAWING NO:	16D025

SHEET NO. 7 OF 15 SHEETS

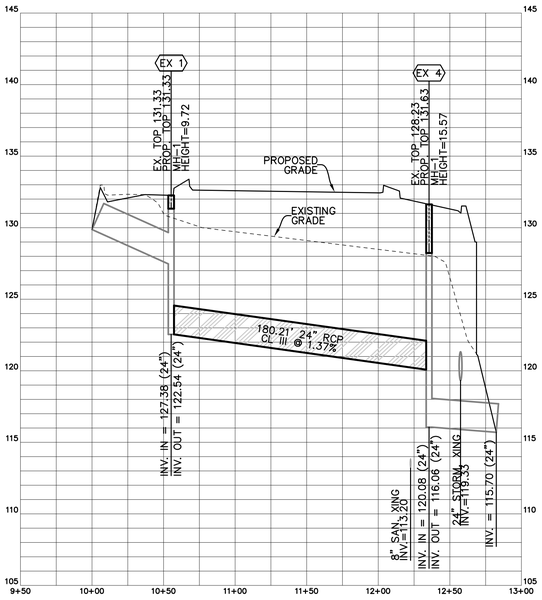

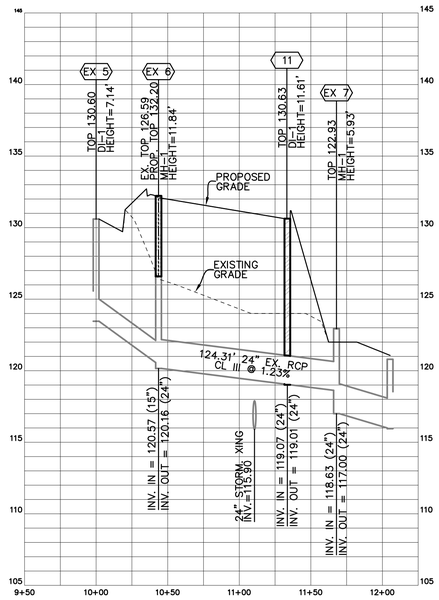

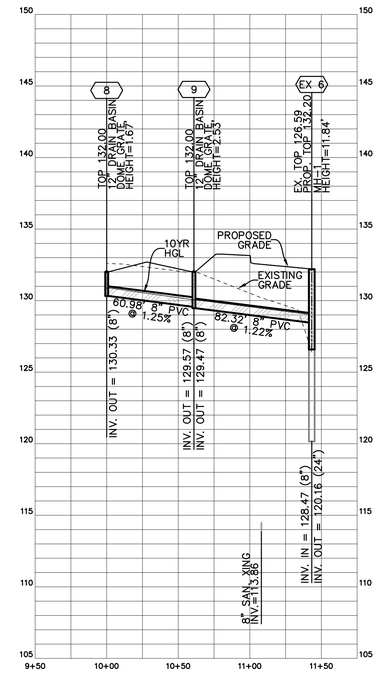

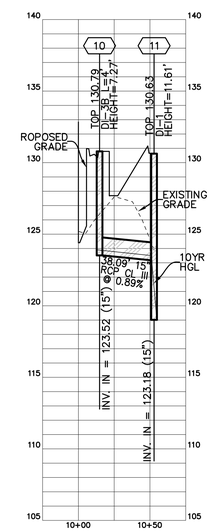

PROFILES

SCALE: 1"=50' HORIZONTAL
1"=5' VERTICAL

0' 50' 100' 150'

STORM SEWER INLET COMPUTATIONS

LineNo.	Inlet ID	Area	InletTime	Int.	RunoffCoeff.	Q =CIA	Q Carry-over	QCaptured	QBypassed	JunctType	CurbHeight	CurbLength	GrateArea	GrateLength	GrateWidth	GutterSlope	GutterWidth	CrossSlope, Sw	CrossSlope, Sx	LocalDepr.	InletDepth	InletSpread	GutterDepth	GutterSpread	BypassLine No.
		(ac)	(min)	(in/hr)	(C)	(cfs)	(cfs)	(cfs)	(cfs)		(in)	(ft)	(sqft)	(ft)	(ft)	(ft/ft)	(ft)	(ft/ft)	(ft/ft)	(in)	(ft)	(ft)	(ft)	(ft)	
1	DI-11	0.14	21	4.03	0.9	0.51	0	0.51	0	Dp-Grate	....	....	2.33	2.5	2.5	Sag	2	0.03	0.03	....	0.07	6.89	0.07	6.89	Sag
2	DI-10	0.24	21	4.03	0.78	0.76	0	0.76	0	Curb	6	4	....	....	....	Sag	2	0.083	0.03	2	0.18	1.48	0.12	1.48	Sag
1	DI-9	0	0	0	0	0	....	....	....	MH	....	....	....	....	....	....	....	....	....	....	....	....	....	....	....
2	DI-8	0.23	21	4.03	0.78	0.72	0	0.72	0	Dp-Grate	....	....	0.58	1	1	Sag	2	0.02	0.02	....	0.15	17.37	0.15	17.37	Sag

STORM SEWER COMPUTATIONS

Line	ToLine	LineLength	Incr.Area	TotalArea	RunoffCoeff.	IncrC x A	TotalC x A	InletTime	TimeConc	RnfalInt.	TotalRunoff	AdnlFlow	TotalFlow	CapacFull	Veloc	PipeSize	PipeSlope	Inv ElevDn	Inv ElevUp	HGLDn	HGLUp	Grnd/RimDn	Grnd/RimUp	Line ID
		(ft)	(ac)	(ac)	(C)			(min)	(min)	(in/hr)	(cfs)	(cfs)	(cfs)	(cfs)	(ft/s)	(in)	(%)	(ft)	(ft)	(ft)	(ft)	(ft)	(ft)	
1	Outfall	34.31	0.14	0.38	0.9	0.13	0.31	5	6.6	6.4	2.01	0	2.01	25.02	2.39	24	1.22	118.63	119.05	119.13	119.43	122	130.63	EX7-11
2	1	36.9	0.24	0.24	0.78	0.19	0.19	6	6	6.6	1.24	0	1.24	6.47	2.03	15	1	123.15	123.52	123.52	123.89	130.63	130.79	11-10
1	Outfall	82.31	0	0.23	0	0	0.18	0	5.3	6.8	1.23	0	1.23	1.85	5.39	9	1.25	128.64	129.67	129.15	130.12	132.16	132	9-EX6
2	1	60.98	0.23	0.23	0.78	0.18	0.18	5	5	6.9	1.25	0	1.25	1.35	4.09	8	1.25	129.77	130.53	130.28	131.04	132	132	8-9

HYDRAULIC GRADELINE COMPUTATIONS

Line	PipeSize	Q	Inv ElevDn	HGLDn	DepthDn	AreaDn	VelocDn	Vel HdDn	EGLDn	SfDn	LineLength	Inv ElevUp	HGLUp	DepthUp	AreaUp	VelocUp	Vel HdUp	EGLUp	SfUp	SfAve	EnergyLoss	JLCCoeff	MinorLoss	Line ID
	(in)	(cfs)	(ft)	(ft)	(ft)	(sqft)	(ft/s)	(ft)	(ft)	(%)	(ft)	(ft)	(ft)	(ft)	(sqft)	(ft/s)	(ft)	(ft)	(%)	(%)	(ft)	(K)	(ft)	
1	24	2.01	118.63	119.13	0.5	0.42	0	0.35	119.49	0	34.31	119.05	119.43	0.38	0.42	4.78	0.35	119.79	0	0	0	1.5	n/a	EX7-11
2	15	1.24	123.15	123.52	0.37*	0.3	0	0.26	123.78	0	36.9	123.52	123.89	0.37	0.3	4.06	0.26	124.15	0	0	0	1	n/a	11-10
1	9	1.23	128.64	129.15	0.51	0.27	6.3	0.31	129.46	0	82.31	129.67	130.12	0.45	0.27	4.48	0.31	130.43	0	0	0	0.53	n/a	9-EX6
2	8	1.25	129.77	130.28	0.51*	0.28	3.8	0.3	130.57	0	60.98	130.53	131.04	0.51	0.28	4.38	0.3	131.33	0	0	0	1	n/a	8-9

Notes: * Normal depth assumed.; ** Critical depth.

REVISION BLOCK		
DATE	DESCRIPTION	BY

COMMONWEALTH OF VIRGINIA
DANIEL C. WEBB
LICENSE NO.
036528
10-12-16
PROFESSIONAL ENGINEER

W W WEBB & ASSOCIATES, PLLC
ENGINEERING · SURVEYING · LAND PLANNING
11903 BOWMAN DRIVE, SUITE 106, FREDERICKSBURG, VA. 22408
OFFICE (540)371-1209 FAX (540)371-4650

DRAINAGE PROFILES & CALCULATIONS

COHEN OFFICE BUILDING
COWAN CROSSING

CITY OF FREDERICKSBURG
VIRGINIA

DATE: OCTOBER 12, 2016
SCALE: SHOWN
DESIGNED BY: DWR
DRAWN BY: MRE
CHECKED BY: DCW

ACAD FILE: 16D025-HSP
DRAWING NO: 16D025

SHEET NO. 8 OF 15 SHEETS

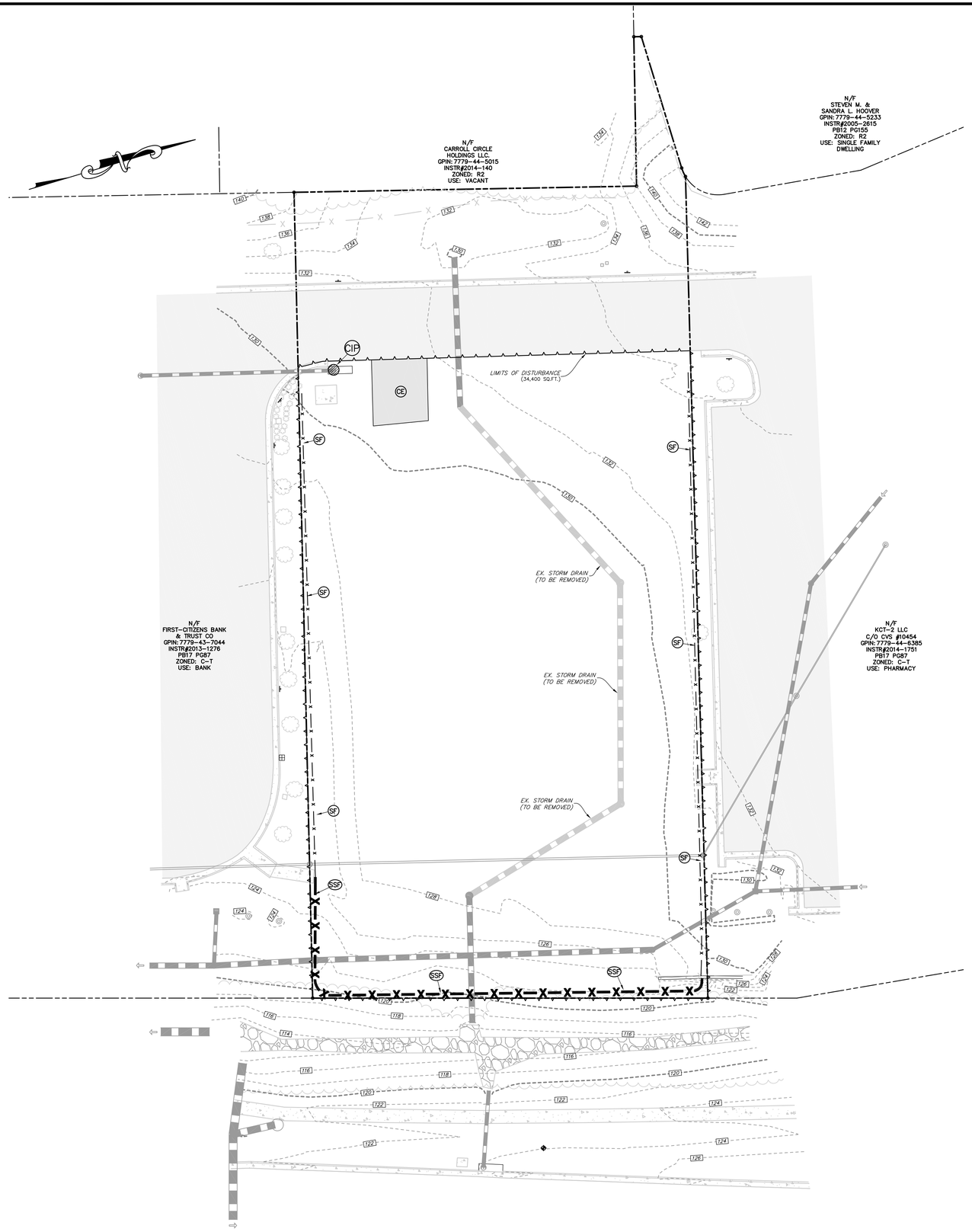

LEGEND:

- DENOTES BOUNDARY LINES
- DENOTES EASEMENT
- DENOTES FENCE
- DENOTES ADJACENT PROPERTY LINE
- DENOTES STORM CULVERT PIPES
- DENOTES CONCRETE AREA
- DENOTES ASPHALT AREA
- (SF) – DENOTES SILT FENCE
- (CE) – DENOTES CONSTRUCTION ENTRANCE
- (SSF) – DENOTES SUPER SILT FENCE

PROJECT PHASING NARRATIVE

PHASE I

1. A PRE-CONSTRUCTION MEETING SHALL BE HELD PRIOR TO LAND DISTURBING ACTIVITIES. AT A MINIMUM, ATTENDEES SHALL INCLUDE THE CITY INSPECTOR AND THE GENERAL CONTRACTOR.
2. EXISTING EROSION AND SEDIMENT CONTROL MEASURE SHALL BE INSPECTED AND REPAIRED AS NECESSARY.
3. INSTALL CONSTRUCTION ENTRANCE, AND INLET PROTECTION.

0' 20' 40' 60'

REVISION BLOCK			
DATE	DESCRIPTION	BY	

COMMONWEALTH OF VIRGINIA
DANIEL C. WEBB
LICENSE NO. 036528
10-12-16
PROFESSIONAL ENGINEER

W W WEBB & ASSOCIATES, PLLC
ENGINEERING · SURVEYING · LAND PLANNING
11903 BOWMAN DRIVE, SUITE 106, FREDERICKSBURG, VA. 22408
OFFICE (540)371-1209 FAX (540)371-4650

EROSION & SEDIMENT CONTROL PLAN -PHASE I

COHEN OFFICE BUILDING
COWAN CROSSING

CITY OF FREDERICKSBURG
VIRGINIA

DATE:	OCTOBER 12, 2016
SCALE:	1" = 20'
DESIGNED BY:	DWR
DRAWN BY:	MRE
CHECKED BY:	DCW
ACAD FILE:	16D025-ISP
DRAWING NO:	16D025

SHEET NO. 9 OF 15 SHEETS

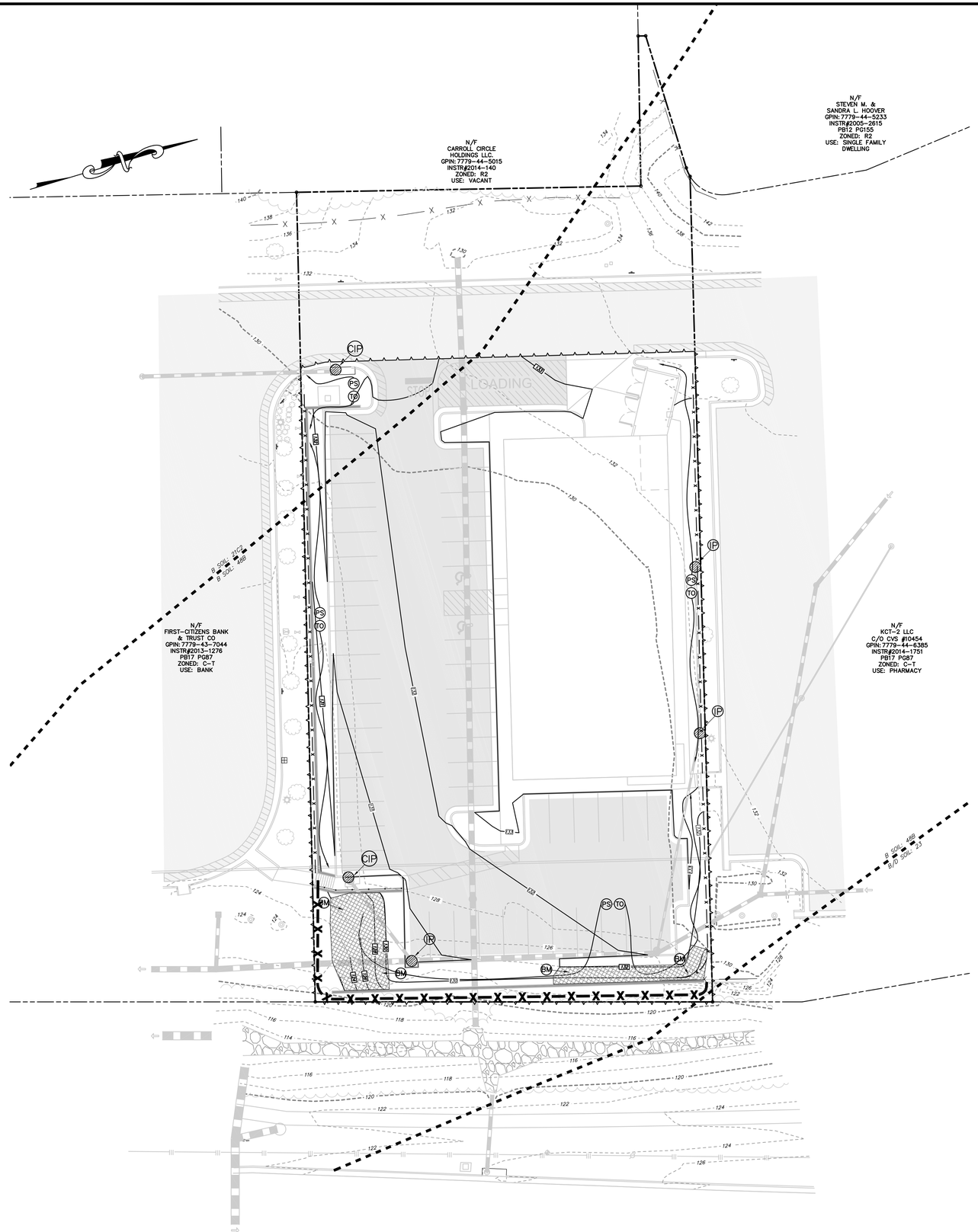

PROJECT PHASING NARRATIVE

PHASE II

1. COMMENCE GRADING OPERATIONS.
2. CONSTRUCT SANITARY SEWER AND STORM DRAIN
3. INSTALL INLET PROTECTION AND REMAINING PHASE II MEASURES ONCE STORM DRAIN INLETS ARE BROUGHT TO FINAL GRADE. INSTALL WATER LINES AND REMAINING UNDERGROUND UTILITIES.
4. START CONSTRUCTION ON THE BUILDING.
5. FINE GRADE PARKING AREA AND INSTALL CURBING.
6. STABILIZE PARKING AREA WITH AGGREGATE MATERIAL AS EARLY AS PRACTICABLE.
7. PAVE PARKING AREA.
8. SOD, SEED AND INSTALL LANDSCAPING.
9. REMOVE ALL E&S MEASURES WITHIS 30 DAYS AFTER FINAL STABILIZATION OF SITE WITH PERMISSION FROM THE INSPECTOR.

LEGEND:

- DENOTES BOUNDARY LINES
- DENOTES EASEMENT
- DENOTES FENCE
- DENOTES ADJACENT PROPERTY LINE
- DENOTES STORM CULVERT PIPES
- (BM) – DENOTES BLANKETS & MATTING
- (PS)-(TO) – DENOTES PERMANENT SEED & TOPSOILING AREA

0′ 20′ 40′ 60′

REVISION BLOCK

DATE	DESCRIPTION	BY

COMMONWEALTH OF VIRGINIA
DANIEL C. WEBB
LICENSE NO.
036528
10-12-16
PROFESSIONAL ENGINEER

W W WEBB
& ASSOCIATES, PLLC
ENGINEERING · SURVEYING · LAND PLANNING
11903 BOWMAN DRIVE, SUITE 106, FREDERICKSBURG, VA. 22408
OFFICE (540)371-1209 FAX (540)371-4650

EROSION & SEDIMENT CONTROL PLAN -PHASE II

COHEN OFFICE BUILDING
COWAN CROSSING

CITY OF FREDERICKSBURG
VIRGINIA

DATE:	OCTOBER 12, 2016
SCALE:	1" = 20'
DESIGNED BY:	DWR
DRAWN BY:	MRE
CHECKED BY:	DCW
ACAD FILE:	16D025-JSP
DRAWING NO:	16D025

SHEET NO. 10 OF 15 SHEETS

E & S CONTROL NARRATIVE

PROJECT DESCRIPTION
THIS PROJECT INCLUDES THE CONSTRUCTION OF THE COHEN OFFICE BUILDING. WORK ASSOCIATED WITH THIS PROJECT WILL INCLUDE CONSTRUCTION OF THE BUILDING, PARKING AREA, STORM SEWER, AND ASSOCIATED UTILITIES. THE TOTAL AREA WITHIN THE LIMITS OF DISTURBANCE IS APPROXIMATELY 0.79 ACRES.

EXISTING SITE CONDITIONS
THIS SITE IS A VACANT COMMERCIAL PAD THAT IS CURRENTLY DISTURBED IN ACCORDANCE WITH APPROVED INFRASTRUCTURE PLANS.

ADJACENT AREAS
THE SITE IS BOUNDED TO THE WEST BY DEVELOPED RESIDENTIAL PROPERTIES, TO THE EAST BY ROUTE 1, TO THE SOUTH BY FIRST CITIZENS BANK, AND TO THE NORTH BY CVS PHARMACY.

OFFSITE AREAS
ALL MATERIALS RESULTING FROM DEMOLITION WORK, EXCEPT AS INDICATED OR SPECIFIED OTHERWISE, SHALL BECOME THE PROPERTY OF THE CONTRACTOR AND SHALL BE REMOVED FROM THE LIMITS OF THE OWNER'S PROPERTY AND DISPOSED OF IN ACCORDANCE WITH APPLICABLE LOCAL, STATE, AND FEDERAL REGULATIONS. THIS PLAN DOES NOT INCLUDE ANY OFF SITE DISPOSAL OR STOCKPILE AREAS.

SOILS MAP
SEE SOILS MAP FOR SOILS INFORMATION, LOCATED ON THIS SHEET.

CRITICAL EROSION AREAS
CRITICAL AREAS ASSOCIATED WITH THIS PROJECT INCLUDE THE JURISDICTIONAL CHANNELS RUNNING ALONG THE EASTERN EDGES OF THE PROJECT. PERIMETER E&S CONTROL SHALL BE INSTALLED AND STABILIZED PRIOR TO ANY EARTH MOVING ACTIVITY.

PERMANENT STABILIZATION
ALL AREAS DISTURBED BY CONSTRUCTION SHALL BE STABILIZED WITH PERMANENT SEEDING IMMEDIATELY FOLLOWING FINISH GRADING. SEEDING SHALL BE DONE WITH KENTUCKY 31 TALL FESCUE ACCORDING TO STD. & SPEC. 3.32, PERMANENT SEEDING, OF THE HANDBOOK. EROSION CONTROL BLANKETS WILL BE INSTALLED OVER FILL SLOPES WHICH HAVE BEEN BROUGHT TO FINAL GRADE AND HAVE BEEN SEEDED TO PROTECT THE SLOPES (AS INDICATED ON THE PLANS) FROM FILL AND GULLY EROSION AND TO ALLOW SEED TO GERMINATE PROPERLY. MULCH (STRAW OR FIBER) WILL BE USED ON RELATIVELY FLAT AREAS. IN ALL SEEDING OPERATIONS, SEED, FERTILIZER AND LIME WILL BE APPLIED PRIOR TO MULCHING

STORMWATER MANAGEMENT
STORMWATER QUALITY IS SATISFIED FOR THIS PROJECT BY THE PURCHASE OF NUTRIENT CREDITS AND THE GROUND REGIONAL STORMWATER MANAGEMENT FACILITY DESIGNED ON APPROVED PLANS PREPARED BY FAIRBANCKS & FRANKLIN TITLED "COWAN COMMERCIAL DEVELOPMENT INFRASTRUCTURE AND FIRST CITIZENS BANK PLAN" DATED 01-07-13 AND REVISED 02-22-13.

STORMWATER QUANTITY IS ALSO SATISFIED BY THE REGIONAL STORMWATER MANAGEMENT FACILITY WHICH WAS DESIGNED BASED ON AN IMPERVIOUS COVER OF 75% PROPOSED SITE IMPERVIOUS COVER IS 74.3%

MAINTENANCE
ALL EROSION AND SEDIMENT CONTROL SYSTEMS SHALL BE MAINTAINED, INSPECTED AND REPAIRED AS NEEDED TO INSURE CONTINUED PERFORMANCE OF THEIR INTENDED FUNCTION. AN INSPECTION SHALL BE MADE DURING OR IMMEDIATELY FOLLOWING INITIAL INSTALLATION OF EROSION AND SEDIMENT CONTROLS, AT LEAST ONCE IN EVERY TWO-WEEK PERIOD, WITHIN 48 HOURS FOLLOWING ANY RUNOFF PRODUCING STORM EVENT, AND AT THE COMPLETION OF THE PROJECT PRIOR TO THE RELEASE OF ANY PERFORMANCE BONDS.

BOND ESTIMATE – COHEN OFFICE BUILDING AT COWAN CROSSING
EROSION & SEDIMENT CONTROL ESTIMATE –PHASE I

ITEM	QUANTITY	UNITS	UNIT PRICE	TOTAL
CONSTRUCTION ENTRANCE	1	EA	$1,000.00	$1,000.00
SILT FENCE	400	LF	$4.50	$1,800.00
SUPER SILT FENCE	190	LF	$20.00	$3,800.00
INLET PROTECTION	1	EA	$175.00	$175.00
			SUBTOTAL=	$6,775.00
			1.25xSUBTOTAL=	$8,468.75

BOND ESTIMATE – COHEN OFFICE BUILDING AT COWAN CROSSING
EROSION & SEDIMENT CONTROL ESTIMATE –PHASE II

ITEM	QUANTITY	UNITS	UNIT PRICE	TOTAL
INLET PROTECTION	4	EA	$175.00	$700.00
PERMANENT SEEDING	0.15	AC	$2,000.00	$300.00
BLANKETS & MATTING	118	SY	$3.00	$354.00
			SUBTOTAL=	$1,354.00
			1.25xSUBTOTAL=	$1,692.50

MINIMUM STANDARDS

1.5 Minimum Standards.
An erosion and sediment control program adopted by a district or locality shall contain regulations that are consistent with the following criteria, techniques and methods:

1. Permanent or temporary soil stabilization shall be applied to denuded areas within seven days after final grade is reached on any portion of the site. Temporary soil stabilization shall be applied within seven days to denuded areas that may not be at final grade but will remain dormant (undisturbed) for longer than 30 days. Permanent stabilization shall be applied to areas that are to be left dormant for more than one year.

2. During construction of the project, soil stock piles shall be stabilized or protected with sediment trapping measures. The applicant is responsible for the temporary protection and permanent stabilization of all soil stockpiles on site as well as soil intentionally transported from the project site. (There are no soil stockpiles or borrow areas associated with this project.)

3. A permanent vegetative cover shall be established on denuded areas not otherwise permanently stabilized. Permanent vegetation shall not be considered established until a ground cover is achieved that, in the opinion of the local program administrator or his designated agent, is uniform, mature enough to survive and will inhibit erosion.

4. Sediment basins and traps, perimeter dikes, sediment barriers and other measures intended to trap sediment shall be constructed as a first step in any land-disturbing activity and shall be made functional before upslope land disturbance takes place.

5. Stabilization measures shall be applied to earthen structures such as dams, dikes and diversions immediately after installation.

6. Surface runoff from disturbed areas that is comprised of flow from drainage area greater than or equal to three acres shall be controlled by a sediment basin. The sediment basin shall be designed and constructed to accommodate the anticipated sediment loading from the land-disturbing activity. The outfall devise or system design shall take into account the total drainage area flowing through the disturbed area to be served by the basin.

7. Cut and fill slopes shall be designed and constructed in a manner that will minimize erosion. Slopes that are found to be eroding excessively within one year of permanent stabilization shall be provided with additional slope stabilizing measures until the problem is corrected.

8. Concentrated runoff shall not flow down cut or fill slopes unless contained within adequate temporary or permanent channel, flume or slope drain structure.

9. Whenever water seeps from a slope face, adequate drainage or other protection shall be provided.

10. All storm sewer inlets that are made operable during construction shall be protected so that sediment-laden water cannot enter the conveyance system without first being filtered or otherwise treated to remove sediment.

11. Before newly constructed stormwater conveyance channels are made operational, adequate outlet protection and any required temporary or permanent channel lining shall be installed in both the conveyance channel and receiving channel.

12. When work in a live watercourse is performed, precautions shall be taken to minimize encroachment, control sediment transport and stabilize the work area to the greatest extent possible during construction. Nonerodible material shall be used for the construction of cause ways and cofferdams. Earthen fill may be used for these structures if armored by nonerodible cover materials.

13. When a live watercourse must be crossed by construction vehicles more than twice in any six-month period, a temporary stream crossing constructed of nonerodible material shall be provided.

14. All applicable federal, state and local regulations pertaining to working in or crossing live watercourses shall be met.

15. The bed and banks of a watercourse shall be stabilized immediately after work in the watercourse is completed.

16. Underground utility lines shall be installed in accordance with the following standards in addition to other applicable criteria:

a. No more than 500 linear feet of trench may be opened at one time.

b. Excavated material shall be placed on the uphill side of trenches.

c. Effluent from dewatering operations shall be filtered or passed through an approved sediment trapping device, or both, and discharged in a manner that does not adversely affect flowing streams or off-site property.

d. Restabilization shall be accomplished in accordance with these regulations.

e. Applicable safety regulations shall be complied with.

17. Where construction vehicle access routines intersect paved public roads, provisions shall be made to minimize the transport of sediment by vehicular tracking onto the paved surface. Where sediment is transported onto a public road surface, the road shall be cleaned thoroughly at the end of each day. Sediment shall be removed from the roads by shoveling or sweeping and transported to a sediment control disposal area. Street washing shall be allowed only after sediment is removed in this manner. This provision shall apply to individual subdivision lots as well as to larger land-disturbing activities.

18. All temporary erosion and sediment control measures shall be removed within 30 days after final site stabilization or after the temporary measures are no longer needed, unless otherwise authorized by the local program administrator. Trapped sediment and the disturbed by the local program administrator. Trapped sediment and the disturbed soil areas resulting from the disposition of temporary measures shall be permanently stabilized to prevent further erosion and sedimentation.

19. Properties and waterways downstream from development sites shall be protected from sediment deposition, erosion and damage due to increases in volume, velocity and peak flow rate of stormwater runoff for the stated frequency storm of 24-hour duration in accordance with the following standards and criteria:

a. Concentrated stormwater runoff leaving a development site shall be discharged directly into an adequate natural or man-made receiving channel, pipe or storm sewer system. For those sites where runoff is discharged into a pipe or pipe system, downstream stability analyses at the outfall of the pipe and pipe system shall be performed.

b. Adequacy of all channels and pipes shall be verified in the following manner:

(1)The applicant shall demonstrate that the total drainage area to the point of analysis within the channel is one hundred times greater than the contributing drainage area of the project in question.

(2) Natural channels shall be analyzed by the use of a two-year frequency storm to verify that stormwater will not overtop channel banks nor cause erosion of channel bed or banks.

(3) All previously constructed man-made channels shall be analyzed by the use of a ten-year frequency storm to verify that stormwater will not overtop its banks and by the use of a two-year storm to demonstrate that stormwater will not cause erosion of channel bed or banks.

(4) Pipes and storm sewer systems shall be analyzed by the use of a ten-year frequency storm to verify that stormwater will be contained within the pipe or system.

c. If existing natural receiving channels or previously constructed man-made channels or pipes are not adequate, the applicant shall:

(1) Improve the channels to a condition where a ten-year frequency storm will not overtop the banks and a two-year frequency storm will not cause erosion to the channel bed or banks; or

(2) Improve the pipe or pipe system to a condition where the ten-year frequency storm is contained within the appurtenances; or

(3) Develop a site design that will not cause the pre-development peak runoff rate from a two-year storm to increase when runoff outfalls into a natural channel or will not cause the pre-development peak run off rate from a ten-year storm to increase when runoff outfalls into a man-made channel.

(4) Provide a combination of channel improvement, stormwater detention/ retention or other measures which is satisfactory to the plan approving authority to prevent downstream erosion.

d. The applicant shall provide evidence of permission to make the improvements.

e. All hydrologic analyses shall be based on the existing watershed characteristics and the ultimate development condition of the subject project.

f. If the applicant chooses an option that includes stormwater detention/retention, he shall obtain approval from the locality of a plan for maintenance of the detention facilities. The plan shall set forth the maintenance requirements of the facility and the person responsible for performing the maintenance.

g. Increased volumes of sheet flows that may cause erosion or sedimentation on adjacent property shall be diverted to a stable outlet, adequate channel or detention facility.

h. In applying these stormwater management criteria, individual lots in a residential subdivision development shall not be considered to be separate development projects. Instead, the residential subdivision development, as a whole, shall be considered to be a single development project. Hydrologic parameters that reflect the ultimate subdivision development shall be used in all engineering calculations.

i. Proposed commercial or industrial subdivisions shall apply these stormwater management criteria to the development as a whole. Hydrologic parameters that reflect the ultimate subdivision development shall be used in all engineering calculations.

EROSION & SEDIMENT CONTROL NOTES

1.) ALL MECHANICAL EROSION AND SEDIMENT CONTROLS ARE TO BE PLACED PRIOR TO OR AS THE FIRST STEP IN CLEARING AND GRADING.

2.) ALL TEMPORARY EARTH BERMS, DIVERSIONS AND SEDIMENT CONTROLS DAMS ARE TO BE MULCHED AND SEEDED IMMEDIATELY AFTER GRADING. HAY OR STRAW OR COMPARABLE MULCH IS REQUIRED.

3.) ALL LAND, ON OR OFF SITE, WHICH IS DISTURBED BY CONSTRUCTION AND WHICH IS NOT BUILT UPON OR SURFACED SHALL BE ADEQUATELY STABILIZED TO CONTROL EROSION AND SEDIMENTATION.

4.) ALL EROSION AND SEDIMENT CONTROL, INCLUDING SEEDING AND MULCHING SHALL BE IN ACCORDANCE WITH THE STANDARDS AND SPECIFICATIONS CONTAINED IN THE SPOTSLYVANIA COUNTY EROSION AND SEDIMENT CONTROL ORDINANCE.

5.) ADDITIONAL SEDIMENT CONTROLS WILL BE INSTALLED IF ONSITE INSPECTIONS REVEAL PROBLEMS.

6.) STOCKPILED TOPSOIL WILL BE SURROUNDED BY EARTH BERMS AND/OR SILT FENCE SEDIMENT BARRIERS.

7.) ALL MEASURES ARE TO BE INSPECTED DAILY BY THE SITE SUPERINTENDENT ANY DAMAGED STRUCTURAL MEASURES WILL BE REPAIRED BY THE CLOSE OF THE FOLLOWING DAY. SEDIMENT CONTROLS WILL BE REMOVED AFTER AREAS ABOVE THEM HAVE BEEN STABILIZED.

8.) THIS PROJECT WILL START AFTER ALL APPROVALS AND PERMITS HAVE BEEN OBTAINED.

9.) THE AREAS USED FOR BURNING DEBRIS SHALL BE SEEDED AFTER DEBRIS REMOVAL IS COMPLETED, USING APPROPRIATE SEEDING MIXTURE RECOMMENDED IN PLAN.

10.) PERMANENT OR TEMPORARY SEEDING SHALL BE APPLIED TO DENUDED AREAS WITHIN SEVEN DAYS AFTER FINAL GRADE IS REACHED ON ANY PORTION OF THE SITE. TEMPORARY SEEDING SHALL BE APPLIED WITHIN SEVEN DAYS TO DENUDED AREAS THAT MAY NOT BE A FINAL GRADE BUT WILL REMAIN DORMANT (UNDISTURBED) FOR LONGER THAN 30 DAYS. PERMANENT SEEDING SHALL BE APPLIED TO AREAS THAT ARE TO BE LEFT DORMANT FOR MORE THAN ONE YEAR.

11.) SEDIMENT BASINS AND TRAPS, PERIMETER DIKES, SEDIMENT BARRIERS AND OTHER MEASURES INTENDED TO TRAP SEDIMENT SHALL BE CONSTRUCTED AS A FIRST STEP IN ANY LAND-DISTURBING ACTIVITY AND SHALL BE MADE FUNCTIONAL BEFORE UPSLOPE LAND DISTURBANCE TAKES PLACE.

12.) STABILIZATION MEASURES SHALL BE APPLIED TO EARTHEN STRUCTURES SUCH AS DAMS, DIKES AND DIVERSIONS IMMEDIATELY AFTER INSTALLATION

13.) BEFORE NEWLY CONSTRUCTED STORMWATER CONVEYANCE CHANNELS ARE MADE OPERATIONAL, ADEQUATE OUTLET PROTECTION AND ANY TEMPORARY OR PERMANENT CHANNEL LINING SHALL BE INSTALLED IN BOTH THE CONVEYANCE CHANNEL AND THE RECEIVING CHANNEL.

14.) ALL DRAINAGE CALCULATIONS ARE BASED ON THE METHODS SET FORTH IN THE VIRGINIA DEPARTMENT OF HIGHWAYS DRAINAGE MANUAL. ALL DRAINAGE CULVERTS AND OUTLET DITCHES ARE DESIGNED FOR A TEN YEAR FREQUENCY STORM.

15.) ALL E&S MEASURES WILL BE REMOVED WITHIN 30 DAYS OF FINAL SITE INSPECTION AND APPROVAL BY SPOTSLYVANIA COUNTY E&S INSPECTORS.

16.) DUST SHALL BE CONTROLLED IN ACCORDANCE WITH SPECIFICATION 3.39 OF THE VIRGINIA EROSION AND SEDIMENT CONTROL HANDBOOK.

17.) CUT AND FILL SLOPES SHALL BE CONSTRUCTED IN A MANNER THAT WILL MINIMIZE EROSION. ADDITIONAL SLOPE STABILIZATION MEASURES SHOULD BE PROVIDED TO PREVENT EXCESSIVE ERIOSION ON SLOPES.

18.) CONCENTRATED RUNOFF SHALL NOT FLOW DOWN CUT OR FILL SLOPES UNLESS CONTAINED WITHIN AN ADEQUATE TEMPORARY OR PERMANENT CHANNEL, FLUME OR SLPE DRAIN STRUCTURE.

19.) ADEQUATE DRAINAGE PROTECTION SHALL BE MADE WHENEVER WATER SEEPS FROM A SLOPE FACE.

20.) IF THE ENTIRE SITE WILL NOT BE PERMANENTLY STABILIZED BEFORE DECEMBER 1, THE RESPONSIBLE LAND DISTURBER SHALL CONTACT THE COUNTY EROSION AND SEDIMENT CONTROL STAFF TO SCHEDULE A PRE-WINTER MEETING TO OCCUR BEFORE OCTOBER 1.

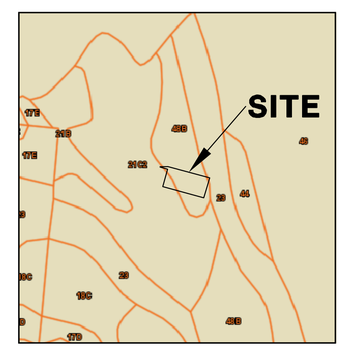

SOILS MAP

0′ 500′ 1000′ 1500′

SOIL TYPE TABLE

MAP SYMBOL	MAPPING UNIT
23	FLUVAQUENTS-UDIFLUVENTS COMPLEX
48B	WHICKHAM LOAM, 2 TO 7 PERCENT SLOPES
21C2	FACEVILLE-VARINA COMPLEX, 7 TO 15 PERCENT SLOPES, MODERATELY ERODED

REVISION BLOCK

DATE	DESCRIPTION	BY

COMMONWEALTH OF VIRGINIA
DANIEL C. WEBB
LICENSE NO. 036528
10-12-16
PROFESSIONAL ENGINEER

W W WEBB & ASSOCIATES, PLLC
ENGINEERING · SURVEYING · LAND PLANNING
11903 BOWMAN DRIVE, SUITE 106, FREDERICKSBURG, VA. 22408
OFFICE (540)371-1209 FAX (540)371-4650

EROSION & SEDIMENT CONTROL -NARRATIVE

COHEN OFFICE BUILDING
COWAN CROSSING
CITY OF FREDERICKSBURG
VIRGINIA

DATE: OCTOBER 12, 2016
SCALE: 1" = 20'
DESIGNED BY: DWR
DRAWN BY: MRE
CHECKED BY: DCW

ACAD FILE: 16D025-KSP
DRAWING NO: 16D025

SHEET NO. 11 OF 15 SHEETS

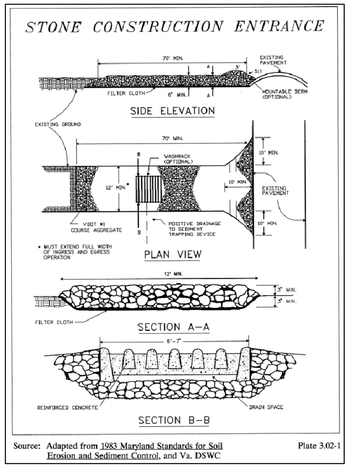

Source: Adapted from 1983 Maryland Standards for Soil Erosion and Sediment Control, and Va. DSWC — Plate 3.02-1

(CE)

INSTALL 24'x70' TEMPORARY CONSTRUCTION ENTRANCE. INGRESS/EGRESS DURING THE CONSTRUCTION PHASE WILL OCCUR IN THIS AREA. NO BYPASSING OF THE CONTRUCTION ENTRANCE WILL BE PERMITTED.

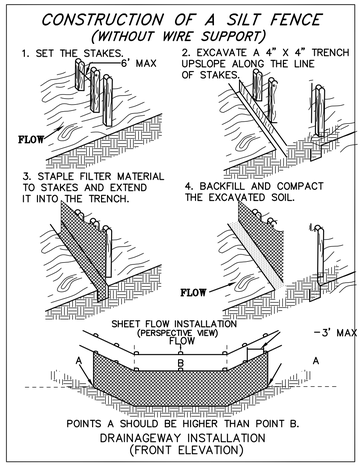

(SF)

—— X —— X —— X ——

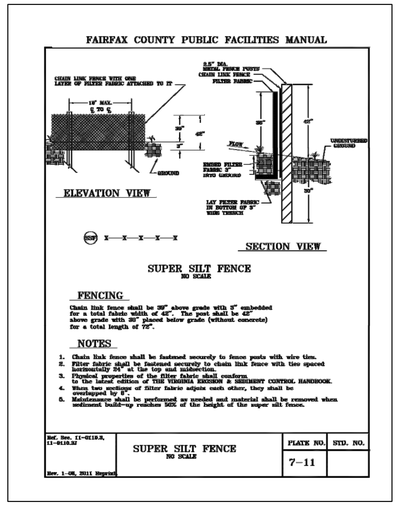

(SSF) –DENOTES SUPER SILT FENCE

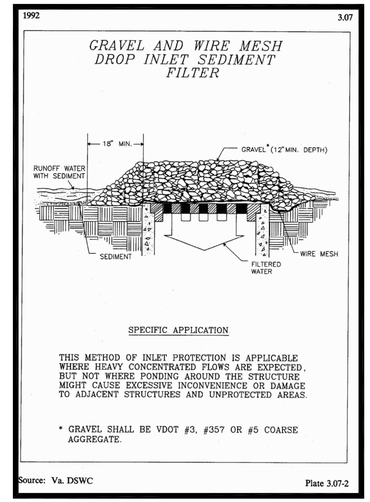

(IP) –DENOTES INLET PROTECTION

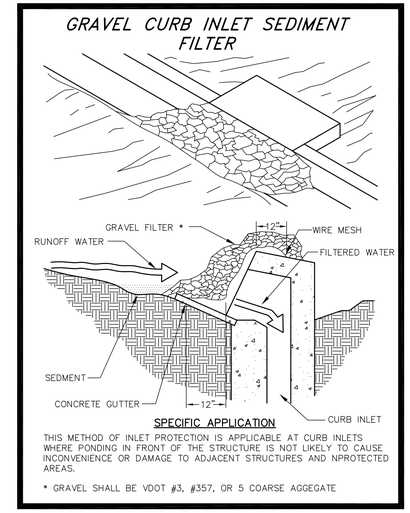

(CIP) –CURB INLET PROTECTION

DUST CONTROL

1992 — 3.39

The following table list various adhesives and provides corresponding information on mixing and application:

TABLE 3.39-A

ADHESIVES USED FOR DUST CONTROL

Adhesive	Water Dilution (Adhesive: Water)	Type of Nozzle	Application Rate Gallons/Acre
Anionic Asphalt Emulsion	7:1	Coarse Spray	1,200
Latex Emulsion	12.5:1	Fine Spray	235
Resin in Water	4:1	Fine Spray	300
Acrylic Emulsion (Non-Traffic)	7:1	Coarse Spray	450
Acrylic Emulsion (Traffic)	3.5:1	Coarse Spray	350

Source: Va. DSWC

TABLE 3.31-A

LIMING REQUIREMENTS FOR TEMPORARY SITES

pH Test	Recommended Application of Agricultural Limestone
below 4.2	3 tons per acre
4.2 to 5.2	2 tons per acre
5.2 to 6	1 ton per acre

NOTE: SOILS TEST ARE REQUIRED TO DETERMINE THE SPECIFIC LIME AND FERTILIZER REQUIREMENTS, TO INSURE THE pH AND NUTRIENT LEVELS ARE ACCEPTABLE.

MULCHING

TABLE 3.35-A

ORGANIC MULCH MATERIALS AND APPLICATION RATES

MULCHES:	RATES: Per Acre	RATES: Per 1000 sq. ft.	NOTES:
Straw or Hay	1½ - 2 tons (Minimum 2 tons for winter cover)	70 - 90 lbs.	Free from weeds and coarse matter. Must be anchored. Spread with mulch blower or by hand.
Fiber Mulch	Minimum 1500 lbs.	35 lbs.	Do not use as mulch for winter cover or during hot, dry periods.* Apply as slurry.
Corn Stalks	4 - 6 tons	185 - 275 lbs.	Cut or shredded in 4-6" lengths. Air-dried. Do not use in fine turf areas. Apply with mulch blower or by hand.
Wood Chips	4 - 6 tons	185 - 275 lbs.	Free of coarse matter. Air-dried. Treat with 12 lbs nitrogen per ton. Do not use in fine turf areas. Apply with mulch blower, chip handler, or by hand.
Bark Chips or Shredded Bark	50 - 70 cu. yds.	1-2 cu. yds.	Free of coarse matter. Air-dried. Do not use in fine turf areas. Apply with mulch blower, chip handler, or by hand.

* When fiber mulch is the only available mulch during periods when straw should be used, apply at a minimum rate of 2000 lbs./ac. or 45 lbs./1000 sq. ft.

SEEDING RECOMMENDATIONS

TABLE 3.32-D

SITE SPECIFIC SEEDING MIXTURES FOR PIEDMONT AREA

	Total Lbs. Per Acre
Minimum Care Lawn	
- Commercial or Residential	175-200 lbs.
- Kentucky 31 or Turf-Type Tall Fescue	95-100%
- Improved Perennial Ryegrass	0-5%
- Kentucky Bluegrass	0-5%
High-Maintenance Lawn	200-250 lbs.
- Kentucky 31 or Turf-Type Tall Fescue	100%
General Slope (3:1 or less)	
- Kentucky 31 Fescue	128 lbs.
- Red Top Grass	2 lbs.
- Seasonal Nurse Crop *	20 lbs.
	150 lbs.
Low-Maintenance Slope (Steeper than 3:1)	
- Kentucky 31 Fescue	108 lbs.
- Red Top Grass	2 lbs.
- Seasonal Nurse Crop *	20 lbs.
- Crownvetch **	20 lbs.
	150 lbs.

* Use seasonal nurse crop in accordance with seeding dates as stated below:
February 16th through April ..... Annual Rye
May 1st through August 15th ..... Fontail Millet
August 16th through October ..... Annual Rye
November through February 15th ..... Winter Rye

** Substitute Sericea lespedeza for Crownvetch east of Farmville, Va. (May through September use hulled Sericea, all other periods, use unhulled Sericea). If Flatpea is used in lieu of Crownvetch, increase rate to 30 lbs./acre. All legume seed must be properly inoculated. Weeping Lovegrass may be added to any slope or low-maintenance mix during warmer seeding periods; add 10-20 lbs./acre in mixes.

TABLE 3.31-B

ACCEPTABLE TEMPORARY SEEDING PLANT MATERIALS

'QUICK REFERENCE FOR ALL REGIONS'

Planting Dates	Species	Rate (lbs./acre)
Sept. 1 - Feb. 15	50/50 Mix of Annual Ryegrass (Lolium multi-florum) & Cereal (Winter) Rye (Secale cereale)	50 - 100
Feb. 16 - Apr. 30	Annual Ryegrass (Lolium multi-florum)	60 - 100
May 1 - Aug 31	German Millet (Setaria italica)	50

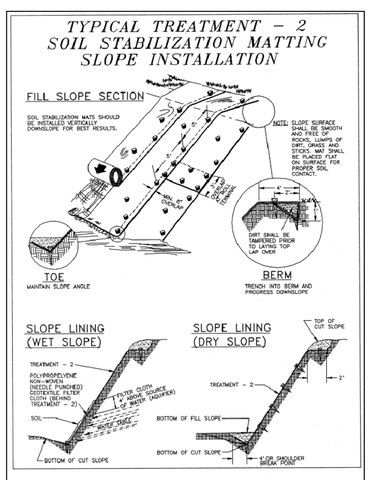

Source: VDOT Road and Bridge Standards — Plate 3.36-5

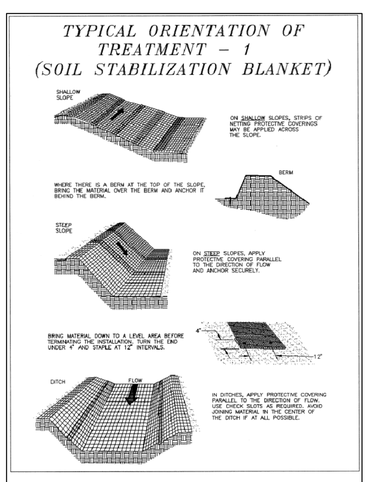

Source: Adapted from Ludlow Products Brochure — Plate 3.36-1

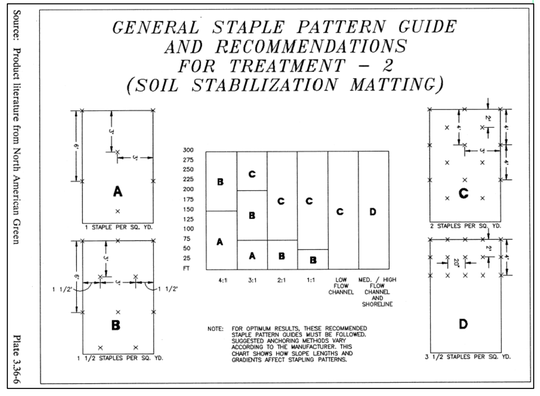

Source: Product literature from North American Green — Plate 3.36-6

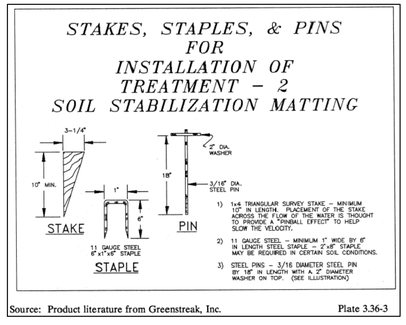

Source: Product literature from Greenstreak, Inc. — Plate 3.36-3

REVISION BLOCK

DATE	DESCRIPTION	BY

COMMONWEALTH OF VIRGINIA — DANIEL C. WEBB — LICENSE NO. 036528 — 10-12-16 — PROFESSIONAL ENGINEER

W W WEBB & ASSOCIATES, PLLC
ENGINEERING · SURVEYING · LAND PLANNING
11903 BOWMAN DRIVE, SUITE 106, FREDERICKSBURG, VA. 22408
OFFICE (540)371-1209 FAX (540)371-4650

EROSION & SEDIMENT CONTROL -DETAILS

COHEN OFFICE BUILDING
COWEN CROSSING
CITY OF FREDERICKSBURG
VIRGINIA

DATE: OCTOBER 12, 2016
SCALE: NA
DESIGNED BY: DWR
DRAWN BY: MRE
CHECKED BY: DCW

ACAD FILE: 16D025-LSP
DRAWING NO: 16D-025

SHEET NO. 12 OF 15 SHEETS

TYPE	STANDARD		YOKE		CUSTOM	SETTER W/BYPASS
METER SIZE (IN.)	5/8 X 3/4	3/4	1	1½	2	2
*METER (OR APPROVED EQUAL)	BADGER	BADGER	BADGER	BADGER	BADGER	BADGER
BARREL DIAMETER (IN.)	18	18	24	30	36	36
METER YOKE/SETTER	FORD Y502	FORD Y503	FORD Y504	VAF 68-12	VAF 71-12	

* TO BE PROVIDED BY CITY AFTER PAYMENT OF ALL FEES

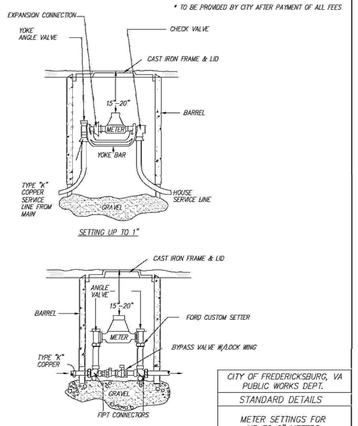

CITY OF FREDERICKSBURG, VA
PUBLIC WORKS DEPT.
STANDARD DETAILS
METER SETTINGS FOR UP TO 2" METERS
AUGUST 2007 | W1

NOTES:
1. THRUST BLOCKS SHALL BE POURED AGAINST UNDISTURBED SOIL.
2. PLACE CONSTRUCTION PAPER BETWEEN FITTINGS AND CONCRETE.
3. MEGALUG RETAINER GLAND (SERIES 1100) AS MANUFACTURED BY EBAA IRON INC. OR APPROVED EQUAL SHALL BE USED.
4. FIRE HYDRANT SHALL BE RESTRAINED FROM THE HYDRANT BASE TO THE BRANCH TEE.
5. ALL VALVES LOCATED OUTSIDE THE PAVEMENT ARE TO HAVE PVC UTILITY MARKERS AS MANUFACTURED BY CARSONITE INTERNATIONAL (CLM-375) OR APPROVED EQUAL (SEE W-12).

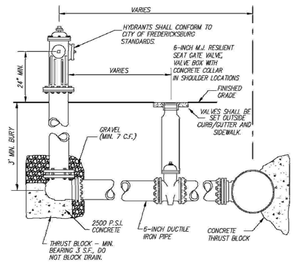

CITY OF FREDERICKSBURG, VA
PUBLIC WORKS DEPT.
STANDARD DETAILS
FIRE HYDRANT ASSEMBLY
AUGUST 2007 | W3

NOTE:
DEPENDING ON CPM FOR THE HYDRANT, ONLY THE "BONNET" WILL BE COMPLETELY PAINTED THE SPECIFIC COLOR

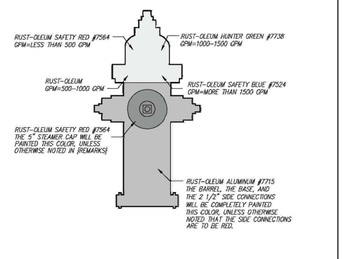

CITY OF FREDERICKSBURG, VA
PUBLIC WORKS DEPT.
STANDARD DETAILS
FIRE HYDRANT PAINTING COLOR CODE
AUGUST 2007 | W3A

SIZE	TEE OF DEAD END			90° BEND			45° BEND			22 1/2 & 11 1/4 BEND		
	A	B	C	A	B	C	A	B	C	A	B	C
4"	2'-0"	2'-0"	1'-6"	2'-0"	2'-0"	1'-6"	2'-0"	1'-6"	1'-6"	2'-0"	1'-6"	1'-6"
6"	3'-0"	4'-0"	3'-0"	4'-0"	4'-0"	3'-0"	3'-0"	3'-0"	2'-0"	3'-0"	3'-0"	2'-0"
10"	3'-0"	4'-5"	3'-0"	4'-0"	5'-0"	3'-0"	3'-0"	4'-0"	3'-0"	3'-0"	3'-0"	3'-0"
12"	4'-0"	6'-0"	3'-0"	6'-0"	6'-0"	3'-0"	4'-0"	5'-0"	3'-0"	3'-0"	3'-0"	3'-0"
16"	6'-0"	7'-0"	6'-0"	8'-0"	8'-0"	6'-0"	4'-0"	6'-0"	3'-0"	4'-0"	4'-0"	3'-0"
20"	8'-0"	8'-0"	5'-0"	9'-0"	10'-0"	5'-0"	6'-0"	8'-0"	4'-0"	4'-0"	8'-0"	3'-0"

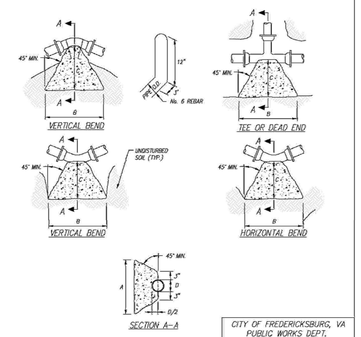

NOTES:
1. WRAP FITTINGS WITH BUILDING PAPER.
2. CONCRETE SHALL NOT INTERFER WITH FITTING JOINTS
3. THRUST BLOCKS SHALL BE 2,500 P.S.I. CONCRETE

CITY OF FREDERICKSBURG, VA
PUBLIC WORKS DEPT.
STANDARD DETAILS
CONCRETE THRUST BLOCK
AUGUST 2007 | W5

IN NON PAVED AREAS PROVIDE BACKFILL COMPACTED TO 90% MAXIMUM DENSITY PER ASTM D698.

IN PAVED AREAS BACK FILL WITH VDOT NUMBER 21A STONE, FULL DEPTH PER ASTM D698.

TRENCH BACKFILL COMPACTED TO 95% MAXIMUM DENSITY PER ASTM D698.

EXTEND BEDDING TO 1/8 PIPE DIAMETER, 4 INCHES MINIMUM ABOVE BOTTOM OF PIPE. EXTEND BEDDING TO SPRINGLINE FOR PVC PIPE.

BEDDING COMPACTED TO 95% MAXIMUM DENSITY PER ASTM D698.

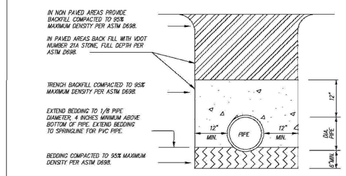

MATERIALS FOR PIPE BEDDING AND TRENCH BACKFILL SHALL BE CLASS II IN ACCORDANCE WITH ASTM D2321 AS FOLLOWS:

CLASS II COARSE SANDS AND GRAVELS WITH MAXIMUM PARTICLE SIZE OF 44MM (1.5"), INCLUDING VARIOUSLY GRADED SANDS AND GRAVELS CONTAINING SMALL PERCENTAGES OF FINES, GENERALLY GRANULAR AND NONCOHESIVE, EITHER WET OR DRY. SOIL TYPES GW, GP, SW AND SP ARE INCLUDED IN THIS CLASS AS SPECIFIED IN ASTM D2487.

BEDDING AND BACKFILL SHALL BE IMPORTED MATERIAL FROM AN APPROVED SOURCE.

CITY OF FREDERICKSBURG, VA
PUBLIC WORKS DEPT.
STANDARD DETAILS
TYPICAL PIPE BEDDING (PAVED AREAS AND OTHER AREAS WHEN IN-SITU MATERIAL UNSUITABLE
AUGUST 2007 | W6A

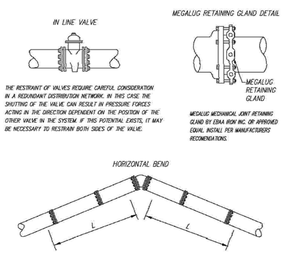

THE RESTRAINT OF VALVES REQUIRE CAREFUL CONSIDERATION IN A REGIONALIZED DISTRIBUTION NETWORK. IN THIS CASE THE SHUTTING OF THE VALVE CAN RESULT IN PRESSURE FORCES ACTING IN THE DIRECTION DEPENDENT ON THE POSITION OF THE OTHER VALVE IN THE SYSTEM. IF THIS POTENTIAL EXISTS, IT MAY BE NECESSARY TO RESTRAIN BOTH SIDES OF THE VALVE.

MEGALUG MECHANICAL JOINT RETAINING GLAND BY EBAA IRON INC. OR APPROVED EQUAL INSTALL PER MANUFACTURERS RECOMENDATIONS.

HORIZONTAL BENDS REQUIRE RESTRAINTS OF ALL JOINTS WITHIN THE CALCULATED LENGTH (L) ON BOTH SIDES OF THE FITTING.

NOTE: (ALL JOINT RESTRAINTS)
IN SOME LOCATIONS THE REQUIRED RESTRAINED LENGTH MAY NOT BE MET. AT THESE LOCATIONS THE USE OF A THRUST BLOCK WILL BE USED ALONG WITH THE RESTRAINED LENGTH OBTAINABLE.

CITY OF FREDERICKSBURG, VA
PUBLIC WORKS DEPT.
STANDARD DETAILS
JOINT RESTRAINT (IN LINE VALVE AND HORIZONTAL BEND)
AUGUST 2007 | W11

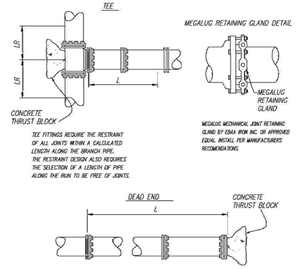

TEE FITTINGS REQUIRE THE RESTRAINT OF ALL JOINTS WITHIN A CALCULATED LENGTH ALONG THE BRANCH PIPE. THE RESTRAINT DESIGN ALSO REQUIRES THE SELECTION OF A LENGTH OF PIPE ALONG THE RUN TO BE FREE OF JOINTS.

MEGALUG MECHANICAL JOINT RETAINING GLAND BY EBAA IRON INC. OR APPROVED EQUAL INSTALL PER MANUFACTURERS RECOMENDATIONS.

DEAD ENDS REQUIRE RESTRAINTS OF ALL JOINTS WITHIN THE CALCULATED LENGTH (L) EXTENDED FROM THE CAP. IN SOME INSTALLATIONS THIS LENGTH CAN BECOME FAIRLY LARGE.

NOTE: (ALL JOINT RESTRAINTS)
IN SOME LOCATIONS THE REQUIRED RESTRAINED LENGTH MAY NOT BE MET. AT THESE LOCATIONS, THE USE OF A THRUST BLOCK WILL BE USED ALONG WITH THE RESTRAINED LENGTH OBTAINABLE.

CITY OF FREDERICKSBURG, VA
PUBLIC WORKS DEPT.
STANDARD DETAILS
JOINT RESTRAINT (IN LINE VALVE AND HORIZONTAL BEND)
AUGUST 2007 | W11A

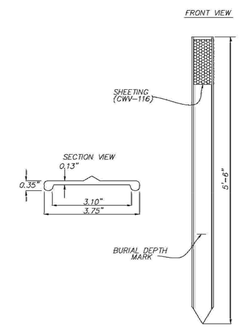

CITY OF FREDERICKSBURG, VA
PUBLIC WORKS DEPT.
STANDARD DETAILS
PVC UTILITY MARKER (CARSONITE CLM-375 PRODUCT NO. CRM 3086/BLUE)
AUGUST 2007 | W12

* SUITABLE EXCAVATED TRENCH MATERIAL MAY BE USED AS BACKFILL SUBJECT TO APPROVAL BY THE CITY OF FREDERICKSBURG. UNSUITABLE EXCAVATED TRENCH MATERIAL SHALL BE REPLACED WITH VDOT AGGREGATE TYPE NO 21A. ALL BACKFILL MATERIAL SHALL BE PLACED IN 6" LIFTS AND COMPACTED TO 95% DENSITY

NOTE:
SHOP DRAWING MUST BE SUBMITTED TO PUBLIC WORKS FOR APPROVAL

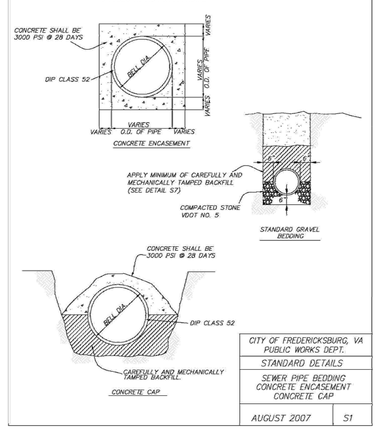

CITY OF FREDERICKSBURG, VA
PUBLIC WORKS DEPT.
STANDARD DETAILS
SEWER PIPE BEDDING CONCRETE ENCASEMENT CONCRETE CAP
AUGUST 2007 | S1

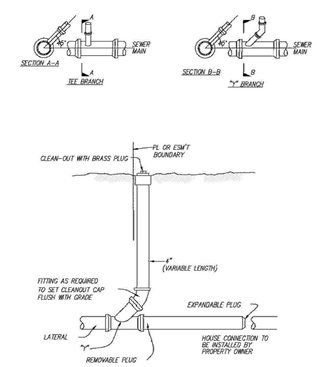

NOTES: NEW HOUSE CONNECTIONS SHALL BE MADE WITH 4" PIPE APPROVED STRAPPED SADDLE Y'S AND TEES MAY BE USED WHERE APPROVED BY THE DEPT OF P.W.

CITY OF FREDERICKSBURG, VA
PUBLIC WORKS DEPT.
STANDARD DETAILS
SEWER SERVICE CONNECTIONS AND CLEAN-OUT
AUGUST 2007 | S2

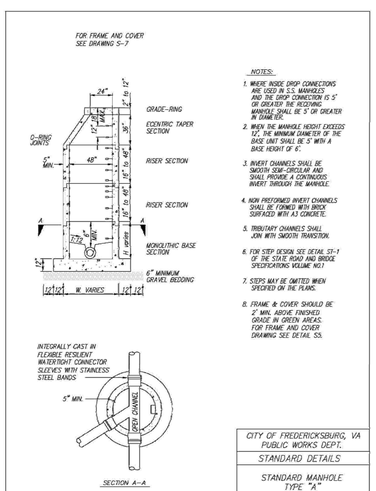

NOTES:
1. WHERE INSIDE DROP CONNECTIONS ARE USED IN S.S. MANHOLES AND THE DROP CONNECTION IS 5' OR GREATER THE RESERVING MANHOLE SHALL BE 5' OR GREATER IN DIAMETER.
2. WHEN THE MANHOLE HEIGHT EXCEEDS 12', THE MINIMUM DIAMETER OF THE BASE UNIT SHALL BE 5' WITH A BASE HEIGHT OF 6'.
3. INVERT CHANNELS SHALL BE SMOOTH SEMI-CIRCULAR AND SHALL PROVIDE A CONTINUOUS INVERT THROUGH THE MANHOLE.
4. NON PREFORMED INVERT CHANNELS SHALL BE FORMED WITH BRICK SURFACED WITH A3 CONCRETE.
5. TRIBUTARY CHANNELS SHALL JOIN WITH SMOOTH TRANSITION.
6. FOR STEP DESIGN SEE DETAIL ST-1 OF THE STATE ROAD AND BRIDGE SPECIFICATIONS VOLUME NO1
7. STEPS MAY BE OMITTED WHEN SPECIFIED ON THE PLANS.
8. FRAME & COVER SHOULD BE 2" MIN. ABOVE FINISHED GRADE IN GREEN AREAS. FOR FRAME AND COVER DRAWING SEE DETAIL S5.

CITY OF FREDERICKSBURG, VA
PUBLIC WORKS DEPT.
STANDARD DETAILS
STANDARD MANHOLE TYPE "A"
AUGUST 2007 | S3

NOTE: WATER TIGHT MANHOLES SHALL BE BOLTED, SHALL HAVE INTEGRAL LIFTING LOOPS, AND SHALL HAVE GASKETS BETWEEN THE COVER AND FRAME AND BETWEEN THE FRAME AND TOP MANHOLE SECTION.

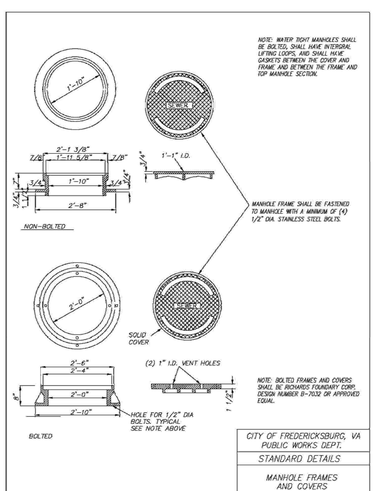

NOTE: BOLTED FRAMES AND COVERS SHALL BE RICHARDS FOUNDARY CORP. DESIGN NUMBER B-7032 OR APPROVED EQUAL.

CITY OF FREDERICKSBURG, VA
PUBLIC WORKS DEPT.
STANDARD DETAILS
MANHOLE FRAMES AND COVERS
AUGUST 2007 | S5

REVISION BLOCK

DATE	DESCRIPTION	BY

COMMONWEALTH OF VIRGINIA
DANIEL C. WEBB
LICENSE NO. 036528
10-12-16
PROFESSIONAL ENGINEER

W W WEBB & ASSOCIATES, PLLC
ENGINEERING · SURVEYING · LAND PLANNING
11903 BOWMAN DRIVE, SUITE 106, FREDERICKSBURG, VA. 22408
OFFICE (540)371-1209 FAX (540)371-4650

UTILITY DETAILS

COHEN OFFICE BUILDING
COWAN CROSSING
CITY OF FREDERICKSBURG
VIRGINIA

DATE:	OCTOBER 12, 2016
SCALE:	NA
DESIGNED BY:	DWR
DRAWN BY:	MRE
CHECKED BY:	DCW
ACAD FILE:	16D025-MSP
DRAWING NO:	16D025

SHEET NO. 13 OF 15 SHEETS

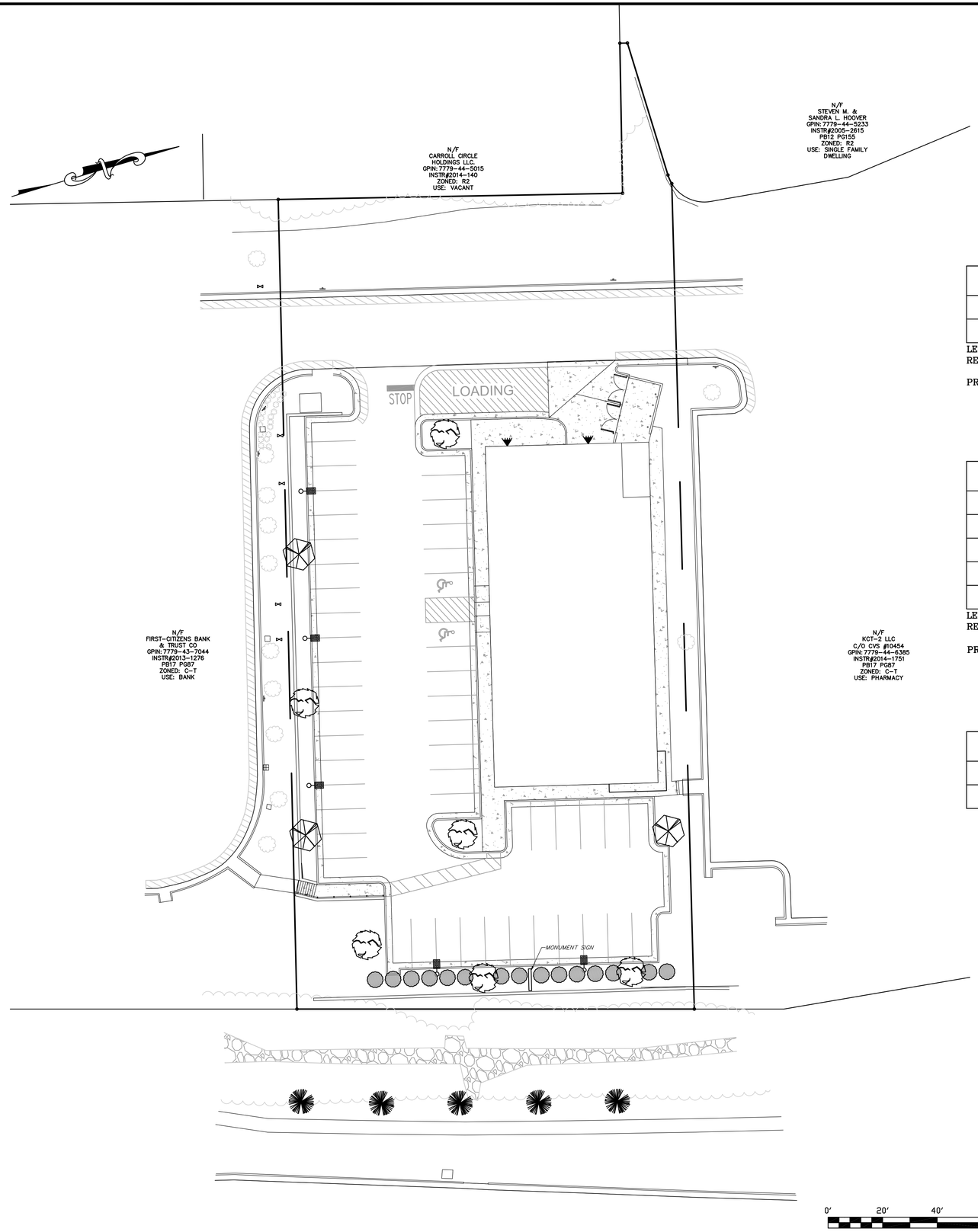

LANDSCAPING & IRRIGATION NOTES:

1. ALL PLANTING BEDS AND TREE SAUCERS SHALL BE MULCHED TO A MINIMUM DEPTH OF 4" WITH SHREDDED BARK MULCH. PLANTING BEDS SHALL BE SUBSTANTIALLY FREE OF FOREIGN MATTER.
2. ALL PLANT MATERIALS SHALL CONFORM TO THE STANDARDS OF THE AMERICAN ASSOCIATION OF NURSERYMEN AND MUST BE APPROVED BY THE LANDSCAPE ARCHITECT OR THE OWNER.
3. "SAUCER RADIUS" REFERS TO A CIRCULAR AREA AROUND THE ROOT BALL OF EACH NEW TREE, TILLED PRIOR TO INSTALLATION TO A MINIMUM DEPTH OF ONE FOOT, TREATED, AND MULCHED.
4. SOIL IN PLANTING BEDS AND TREE SAUCERS SHALL BE TESTED FOR PH AND NUTRIENT AVAILABILITY, AND AMENDED AS NECESSARY USING ORGANICE FERTILIZERS.
5. ALL AREAS NOT SHOWN WITH LANDSCAPING SHALL BE SEEDED OR SODDED.
6. IRRIGATION DESIGN PROVIDED BY OTHERS.

PERIMETER PARKING LOT LANDSCAPING CALCULATIONS

KEY	BOTANICAL NAME	COMMON NAME	QUANTITY	CALIPER SIZE/HEIGHT	REMARKS	CANOPY	UNDERSTORY	SHRUBS	UNIT COST	COST ESTIMATE
	ACER RUBRUM	RED MAPLE	3	3" CALIPER & 12' HEIGHT	B&B	3			$300.00	$900.00
	JUNIPERUS CHINENSIS 'SEA GREEN'	SEA GREEN JUNIPER	15	2'-3' HEIGHT	B&B			15	$25.00	$375.00

LENGTH OF VEHICULAR LANDSCAPING STRIP= 99 LF
REQUIRED: 8(ACI) OF CANOPY TREES PER 100 LINEAR FEET OF LANDSCAPING STRIP= 8 (ACI) OF CANOPY TREES
CONTINOUS VISUAL SCREEN OF EVERGREEN SHRUBS
PROVIDED: 9(ACI) OF CANOPY TREES
CONTINOUS VISUAL SCREEN OF SEA GREEN JUNIPER PLANTED 6FT ON CENTER

TOTAL $1,275.00

LANDSCAPING BOND ESTIMATE AT 50% — BOND $637.50

STREET TREES LANDSCAPING CALCULATIONS

KEY	BOTANICAL NAME	COMMON NAME	QUANTITY	CALIPER SIZE/HEIGHT	REMARKS	CANOPY	UNDERSTORY	SHRUBS	UNIT COST	COST ESTIMATE
	PRUNUS SERRULAT 'KWANZAN'	KWANZAN CHERRY	1	3" CALIPER & 12' HEIGHT	B&B	3			$300.00	$300.00
	GLEDITSIA TRIACANTHOS	HONEY LOCUST	1	3" CALIPER & 12' HEIGHT	B&B	3			$300.00	$300.00
	NYSSA SYLVATICA	BLACKGUM	1	3" CALIPER & 12' HEIGHT	B&B	3			$300.00	$300.00
	ACER BUERGERIANUM	TRIDENT MAPLE	1	3" CALIPER & 12' HEIGHT	B&B	3			$300.00	$300.00
	GINKGO BILOBA AUTUMN GOLD	GINKGO	1	3" CALIPER & 12' HEIGHT	B&B	3			$300.00	$300.00

LENGTH OF STREET FRONTAGE= 146 LF
REQUIRED: CANOPY TREES SPACED A MAXIMUM AVERAGE OF 40' ON CENTER= 4 TREES
NO SINGLE GENUS SHALL CONSTITUTE MORE THAN 20% OF TREES PLANTED
PROVIDED: 5 CANOPY TREES

TOTAL $1,500.00

LANDSCAPING BOND ESTIMATE AT 50% — BOND $750.00

INTERIOR PARKING LOT LANDSCAPING CALCULATIONS

KEY	BOTANICAL NAME	COMMON NAME	QUANTITY	CALIPER SIZE/HEIGHT	REMARKS	CANOPY	UNDERSTORY	SHRUBS	UNIT COST	COST ESTIMATE
	ACER RUBRUM	RED MAPLE	3	3" CALIPER & 12' HEIGHT	B&B	3			$300.00	$900.00
	FAGUS GRANDIFOLIA	AMERICAN BEECH	3	3" CALIPER & 12' HEIGHT	B&B	3			$300.00	$900.00

TOTAL $1,800.00

LANDSCAPING BOND ESTIMATE AT 50% — BOND $900.00

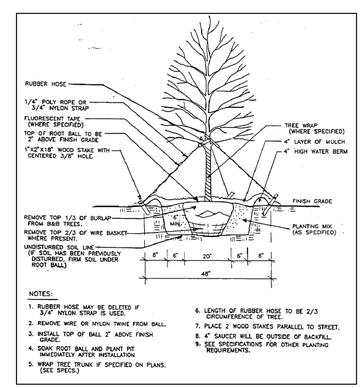

SINGLE STEM TREE PLANTING DETAIL

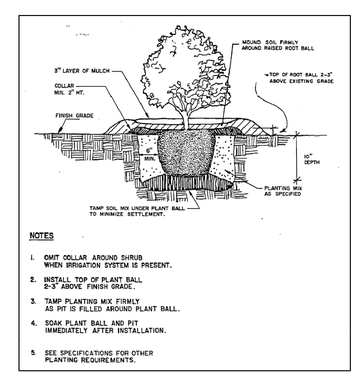

SHRUB PLANTING DETAIL

REVISION BLOCK

DATE	DESCRIPTION	BY

COMMONWEALTH OF VIRGINIA
DANIEL C. WEBB
LICENSE NO. 036528
10-12-16
PROFESSIONAL ENGINEER

W W WEBB & ASSOCIATES, PLLC
ENGINEERING · SURVEYING · LAND PLANNING
11903 BOWMAN DRIVE, SUITE 106, FREDERICKSBURG, VA. 22408
OFFICE (540)371-1209 FAX (540)371-4650

LANDSCAPING PLAN

COHEN OFFICE BUILDING
COWAN CROSSING
CITY OF FREDERICKSBURG
VIRGINIA

DATE:	OCTOBER 12, 2016
SCALE:	1' = 20'
DESIGNED BY:	DWR
DRAWN BY:	MRE
CHECKED BY:	DCW
ACAD FILE:	16D025-NSP
DRAWING NO:	16D025

SHEET NO. 14 OF 15 SHEETS

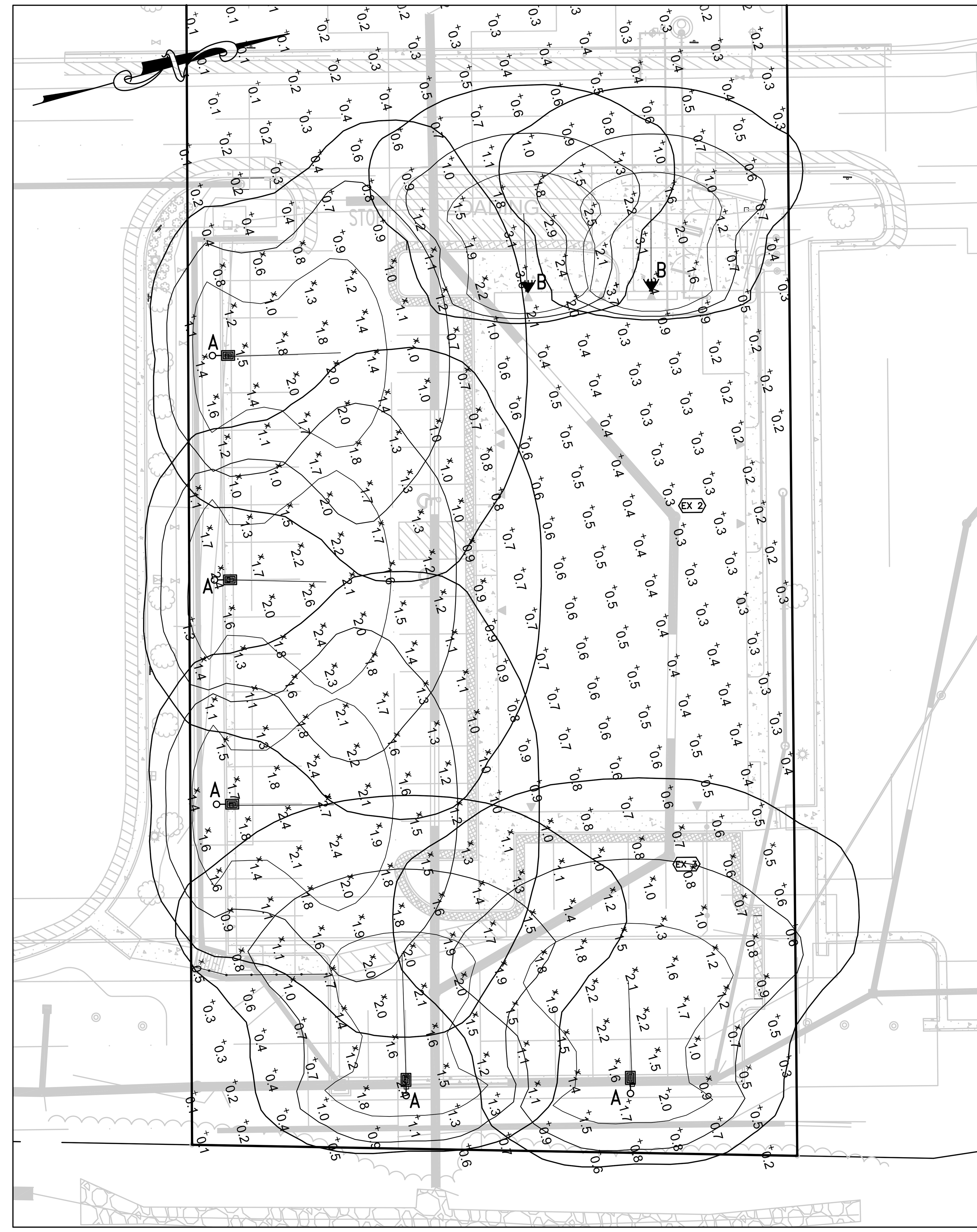

KAX LED Size 1
LED Area Luminaire

Catalog Number

Notes

Type

Hit the Tab key or mouse over the page to see all interactive elements.

Specifications

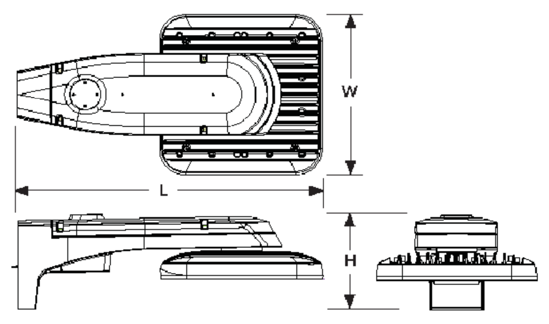

EPA:	0.7 ft² (0.07 m²)
Length:	25" (64 cm)
Width:	13-1/4" (34 cm)
Height:	7-3/4" (20 cm)
Weight (max):	26 lbs (11.8 kg)

Introduction

This feature-rich luminaire embodies the highest level of functionality, and with field-rotatable optics and optional tilt, light can be placed exactly where it's needed. The optics are specifically designed to maximize the light in the desired area and are particularly useful in small to medium sized parking lots or lots requiring higher illuminance levels such as restaurants, banks, service stations, corporate offices and strip malls. By providing the maximum amount of light at minimal cost, the KAX1 is the perfect choice for new installations or retrofit installations replacing up to 400W MH.

Ordering Information

EXAMPLE: KAX1 LED P4 40K R3 MVOLT SPA DDBXD

Series	Performance package	Color temperature	Distribution	Voltage	Mounting
KAX1 LED	P1 P2 P3 P4	30K 3000K 40K 4000K 50K 5000K	R3 Type 3 R4 Type 4 R5 Type 5	MVOLT[1] 120[1] 208[1] 240[1] 277[1] 347 480	Shipped included SPA Square pole mounting RPA Round pole mounting Shipped separately

Control options | Other options | Finish (required)

Controls & Shields

Accessories

One Lithonia Way • Conyers, Georgia 30012 • Phone: 800.279.8041 • www.lithonia.com

© 2011-2016 Acuity Brands Lighting, Inc. All rights reserved.

KAX1-LED Rev. 06/21/16 Page 1 of 3

KAXW
LED Wall Luminaire

Catalog Number

Notes

Type

Hit the Tab key or mouse over the page to see all interactive elements.

Introduction

This feature-rich luminaire embodies the highest level of functionality, making it the perfect choice for most building mount applications. The optics are specifically designed to maximize the light in the desired area making it the smart choice for building-mounted doorway and pathway illumination on nearly any type of facility. By providing the maximum amount of light at minimal cost, the KAXW is the perfect choice for new installations or retrofit installations replacing up to 400W MH.

Specifications

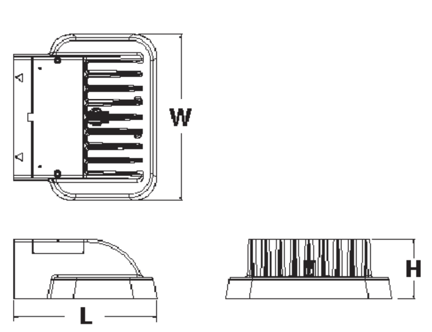

Length:	14" (35.6 cm)
Width:	12" (35.6 cm)
Height:	5" (12.7 cm)
Weight (max):	19.7 lbs (8.9 kg)

Ordering Information

EXAMPLE: KAXW LED P3 40K R3 MVOLT DDBXD

Series	Performance package	Color temperature	Distribution	Voltage	Mounting	Control options	Other options	Finish (required)
KAXW LED	P1 P2 P3	30K 3000K 40K 4000K 50K 5000K	R3 Type 3 R4 Type 4	MVOLT[1] 120[1] 208[1] 240[1] 277[1] 347 480	Shipped included (blank) Surface mounting bracket	Shipped included	Shipped included Shipped separately	DDBXD Dark bronze DBLXD Black DNAXD Natural aluminum DWHXD White DSSXD Sandstone

Accessories

One Lithonia Way • Conyers, Georgia 30012 • Phone: 800.279.8041 • Fax: 770.918.1209 • www.lithonia.com

© 2011-2016 Acuity Brands Lighting, Inc. All rights reserved.

KAXW-LED Page 1 of 2

KW Industries

Getting your brightest ideas off the ground®

KW Online
Welcome pat!

Main Website

Online Catalog

Search Poles by EPA

Create Submittal Sheet

Change your password

LOG OFF

CONTACT EMAILS:

Regional Manager:
wayne.seaman@kwindustries.com

Customer Service:
customerservice@kwindustries.com

SSP Square Non-Tapered Steel Poles

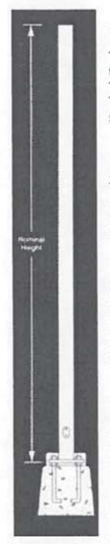

SSP

Pole Shaft

The pole shaft is one piece construction, being fabricated from a weldable grade carbon steel structural tubing which has a uniform wall thickness of 11 gauge (0.1196"), 7 gauge (0.1793"), or 3 gauge (0.2391"). The pole shaft material shall conform to ASTM A-500 Grade C with a minimum yield strength of 50,000 psi. The pole shaft has a full length longitudinal resistance weld and is uniformly square in cross-section with flat sides, small corner radii and excellent torsional properties.

Base Plate

The anchor base is fabricated from structural quality hot rolled carbon steel plate that meets or exceeds a minimum yield strength of 36,000 psi. The anchor base telescopes the pole shaft and is circumferentially welded top and bottom. All welds are performed in accordance with the American Welding Society specification AWS D1.1, latest edition.

Anchor Bolts

Anchor bolts are fabricated from commercial quality hot rolled carbon steel bar that meets or exceeds a minimum yield strength of 55,000 psi. Four properly sized anchor bolts, each with two regular hex nuts and washers, are furnished and shipped with all poles unless otherwise specified. Anchor bolts shall have the threaded end galvanized a minimum of 8 inches in accordance with ASTM A-153. Fully galvanized anchor bolts are available upon request.

Handhole

An oval reinforced gasketed handhole, having a nominal 3" x 5" or 4" x 6-1/2" inside opening, located 1'-6" above base, is standard on all poles. Optional 5" x 8" and 4" x 10" handholes are available (see options). A grounding provision is located inside the handhole ring.

Finishes

The **Standard Finish** is a polyester thermosetting powder coating applied to the surface of the substrate to a minimum of 3 mils for all color finishes. **Hot dip Galvanized** finish to a ASTM A-123 specification or primed finish is also available. For optional finishes, see **K-KLAD** and **K-KLAD Over Galvanizing**.

HOW TO ORDER

When ordering KW lighting standards, mounting adaptors and accessories, be sure to specify the complete catalog number. Our catalog numbers reflect the precise specifications of the item ordered to ensure our customers will receive the product which meets their exact requirements.
The following explanation of the catalog numbers will be helpful in placing orders:

CATALOG LOGIC - ORDERING SAMPLE

SERIES, NOMINAL HEIGHT, BASE DIAMETER, GAUGE, FINISH, MOUNTING DESIGNATION, OPTIONS

SSP 30 - 5.0 - 11 - BRZ - DM10 - BC

Catalog Number	Nominal Height	Pole Shaft	Gauge	Handhole Size	Anchor Bolt	Bolt Circle	80 MPH	90 MPH	100 MPH	Ship WT.	Select
SSP20-4.0-11	20	4.0 x 20.0	11	3 x 5	0.75 x 17 x 3	8	12.3	9	6.5	151	Configure
SSP20-4.0-7	20	4.0 x 20.0	7	3 x 5	0.75 x 30 x 3	8	19.6	15	11.5	219	Configure
SSP20-5.0-11	20	5.0 x 20.0	11	3 x 5	1.00 x 36 x 4	11	22.2	16.8	12.6	235	Configure
SSP20-5.0-7	20	5.0 x 20.0	7	3 x 5	1.00 x 36 x 4	11	35.4	27.5	21.5	313	Configure
SSP20-6.0-7	20	6.0 x 20.0	7	3 x 5	1.00 x 36 x 4	11.5	56	42.5	33.5	368	Configure
SSP22-4.0-11	22	4.0 x 22.0	11	3 x 5	0.75 x 17 x 3	8	6.9	4.3	2.3	182	Configure
SSP22-4.0-7	22	4.0 x 22.0	7	3 x 5	0.75 x 30 x 3	8	12.2	8.7	6	266	Configure
SSP22-5.0-11	22	5.0 x 22.0	11	3 x 5	1.00 x 36 x 4	11	18.5	13.6	9.8	252	Configure
SSP22-5.0-7	22	5.0 x 22.0	7	3 x 5	1.00 x 36 x 4	11	30.2	23.2	17.8	337	Configure
SSP22-6.0-7	22	6.0 x 22.0	7	3 x 5	1.00 x 36 x 4	11.5	49	37.5	28	398	Configure
SSP24-4.0-7	24	4.0 x 24.0	7	3 x 5	0.75 x 30 x 3	8	12.2	8.7	6	266	Configure
SSP24-5.0-11	24	5.0 x 24.0	11	3 x 5	1.00 x 36 x 4	11	15.2	10.8	7.4	268	Configure
SSP24-5.0-7	24	5.0 x 24.0	7	3 x 5	1.00 x 36 x 4	11	25.8	19.4	14.6	361	Configure
SSP24-6.0-7	24	6.0 x 24.0	7	3 x 5	1.00 x 36 x 4	11.5	42	31.5	23	428	Configure
SSP25-4.0-11	25	4.0 x 25.0	11	3 x 5	0.75 x 17 x 3	8	6.9	4.3	2.3	182	Configure
SSP25-4.0-7	25	4.0 x 25.0	7	3 x 5	0.75 x 30 x 3	8	12.2	8.7	6	266	Configure
SSP25-5.0-11	25	5.0 x 25.0	11	3 x 5	1.00 x 36 x 4	11	13.8	9.5	6.3	276	Configure
SSP25-5.0-7	25	5.0 x 25.0	7	3 x 5	1.00 x 36 x 4	11	23.8	17.7	13.1	373	Configure
SSP25-6.0-7	25	6.0 x 25.0	7	3 x 5	1.00 x 36 x 4	11.5	39	28.5	21	443	Configure

FINISHES

Standard
- BRZ Bronze
- BLK Black
- GRY Gray
- GRN Green
- WHT White
- P Primed
- NA Natural Aluminum

Galvanized
- G Galvanized

K-KLAD
- K813 Bronze
- K821 Black
- K841 Gray
- K891 Green
- K881 White
- K845 Natural Aluminum

K-KLAD Over Galvanizing
- KZ13 Bronze
- KZ21 Black
- KZ41 Gray
- KZ91 Green
- KZ81 White
- KZ45 Natural Aluminum

1 YEAR WARRANTY | 5 YEAR WARRANTY | 10 YEAR WARRANTY

MOUNTING DESIGNATIONS

Tenon Mount
- 2 2 3/8" x 4" TENON
- 3 2 7/8" x 4" TENON
- 3.5 3 1/2" x 6" TENON
- 4 4" x 6" TENON

Drill Mount
- DM10 Drilled for 1 Luminaire
- DM2090 Drilled for 2 Luminaires @ 90º
- DM2180 Drilled for 2 Luminaires @ 180º
- DM3090 Drilled for 3 Luminaires @ 90º
- DM4090 Drilled for 4 Luminaires @ 90º

Open Mount
- OT Open Top
- OTC Open Top includes Pole Cap

Gain Mount
- 1GSS4 (1) CXA
- 2GSS4 (2) CXA's located on the Same Side
- 3GSS4 (3) CXA's located on the Same Side
- 4GSS4 (4) CXA's located on the Same Side
- 2GBB4 (2) CXA's located Back to Back
- 4GBB4 (4) CXA's located Back to Back
- 1GSS9 (1) CXASQ
- 2GSS9 (2) CXASQ's located on the Same Side
- 3GSS9 (3) CXASQ's located on the Same Side
- 4GSS9 (4) CXASQ's located on the Same Side
- 2GBB9 (2) CXASQ's located Back to Back
- 4GBB9 (4) CXASQ's located Back to Back

OPTIONS

There are numerous options that can be ordered. Please indicate these selections under the options column in the catalog number. Example: CPL-WPR2-BC.

Accessories
- BC Base Cover
- CPL Threaded Coupling*
- NPL Threaded Nipple*
- WPRP Festoon Opening**
- LAB Less Anchor Bolt

Optional Handholes
- 58HH 5" x 8" Handhole*
- 410HH 4" x 10" Handhole*

Extra Handholes
- XHH Extra Handhole*

Embedment Pole Options
- E Embedded Pole
- GS Ground Sleeve
- CTE Coal Tar Epoxy

For Embedment Poles:

Recommended Mounting Height	Recommended Embedment Depth
Less than 20'	4'
20' - 33'	6'
Greater than 33'	7'

Greater embedment depths are available upon request.
Embedment poles greater than 35' are not available.

Additional Simplex
- 1S 1 @ 0º *
- 2S 2 @ 180º *
- 3S 3 @ 90º *
- 4S 4 @ 90º *

* Please advise size, location, and orientation. (Handholes are restricted by size of pole shaft diameter)
** Located 24" above baseplate and same side as handhole. (No electrical included)

PACKAGING

Immediately after coating, the lighting standard including the baseplate shall be wrapped in heavy corrugation specially designed and sized to achieve maximum protection in transit.

KW Industries, Inc. coating process system and stringent quality control procedures provide our customer the finest quality lighting standards in the industry.

Printer Friendly View

0' 20' 40' 60'

LUMINAIRE SCHEDULE

Symbol	Label	Mounting Height ft.	Quantity	Manufacturer	Catalog Number	Description	Lamp	Number Lamps	Filename	Lumens Per Lamp	Light Loss Factor	Wattage	Type of Mount
	A	25	5	Lithonia Lighting	KAX1 LED P3 50K R4 MVOLT	KAX AREA SERIES SIZE 1, PERFORMANCE PACKAGE 3, 5000 K, TYPE 4, 120-277V	LED	1	KAX1_LED_P3_50K_R4_MVOLT.ies	17516	0.9	130	Mast Arm
	B	13	2	Lithonia Lighting	KAXW LED P3 50K R4 MVOLT	KAXW LED, PERFORMANCE PACKAGE 3, 5000K, TYPE 4,	LED	1	KAXW_LED_P3_50K_R4_MVOLT.ies	9878	0.9	79	Wall Mount

LIGHTING MAINTENANCE PLAN

THE OWNER SHALL BE RESPONSIBLE FOR OPERATING AND MAINTAINING THE PROPOSED LIGHTING SYSTEM IN ACCORDANCE WITH MANUFACTURES SPECIFICATIONS AND STAFFORD COUNTY STANDARDS.

1. ALL FAILED LAMPS SHALL BE IMMEDIATELY REPLACED WITH THE CORRECT LAMP TYPE AND SIZE.
2. ALL ELECTRICAL COMPONENTS, PHOTOCELLS, AND VANDALIZED OR DAMAGED LUMINAIRES SHALL BE IMMEDIATELY REPAIRED OR REPLACED WITH LIKE MATERIAL.
3. ALL LUMINAIRES SHALL BE KEPT CLEAN.
4. ALL SHUBBERY SHALL BE PRUNED TO PREVENT IMPEDANCE OF LIGHT.
5. ALL LAMPS SHALL BE INSPECTED MONTHLY DURING HOURS OF DARKNESS TO INSURE PROPER FUNCTION AND TO IDENTIFY NECESSARY REPAIRS AND/OR REPLACEMENTS.

NOTE: ADJUST POLE HEIGHT TO ALLOW FOR HEIGHT OF CONCRETE BASE.

NOTE: POLE FOUNDATION DESIGN BY OTHERS.

NOTE: SUPPLIER SHALL VERIFY THAT POLE SPECIFICATIONS ARE ADEQUATE FOR THE FIXTURES SUPPLIED.

NOTE: FOR PRICING, CONTACT JAMES P. MORGAN, JR AT (804) 358-2300, ILLUMINATION CONCEPTS & SALES.

Statistics

Description	Symbol	Avg	Max	Min	Max/Min	Avg/Min
Stat Zone # 1	✕	1.5 fc	2.7 fc	0.5 fc	5.4:1	3.0:1

THIS PLAN IS FOR LIGHTING PURPOSES ONLY!!

REVISION BLOCK

DATE	DESCRIPTION	BY

COMMONWEALTH OF VIRGINIA
DANIEL C. WEBB
LICENSE NO. 036528
10-12-16
PROFESSIONAL ENGINEER

W W WEBB & ASSOCIATES, PLLC
ENGINEERING - SURVEYING - LAND PLANNING
11903 BOWMAN DRIVE, SUITE 106, FREDERICKSBURG, VA. 22408
OFFICE (540)371-1209 FAX (540)371-4650

LIGHTING PLAN

COHEN OFFICE BUILDING
COWAN CROSSING
CITY OF FREDERICKSBURG
VIRGINIA

DATE: OCTOBER 12, 2016
SCALE: 1" = 20'
DESIGNED BY: DWR
DRAWN BY: MRE
CHECKED BY: DCW

ACAD FILE: 16D025-OSP
DRAWING NO: 16D025